ICETRO

America

ID-0450-AN INSTALL & SERVICE MANUAL

Rev. 3/21/25

ICETRO America

ICE / WATER DISPENSER

ID-0450-AN

AIR COOLED

KEY FEATURES:

- 378 lbs daily nugget ice production (70F/50F)
- 30 lbs ice storage capacity
- Rugged stainless steel evaporator & auger
- Counter top model
- Swing front door for easy maintenance
- Three modes available (ICE / WATER / ICE & WATER)
- Automatic flush for scale prevention
- UV sterilization for bacteria prevention
- 304 durable Stainless steel
- R-404A Refrigerant
- Power cord with NEMA 5-15 plug

STANDARD WARRANTY:

- ID-0450-AN: 3-Year Parts & Labor
- Compressor: 5- Year Parts & 3-Year Labor

UV Sterilization
Detachable inner chute for cleaning and sterilization

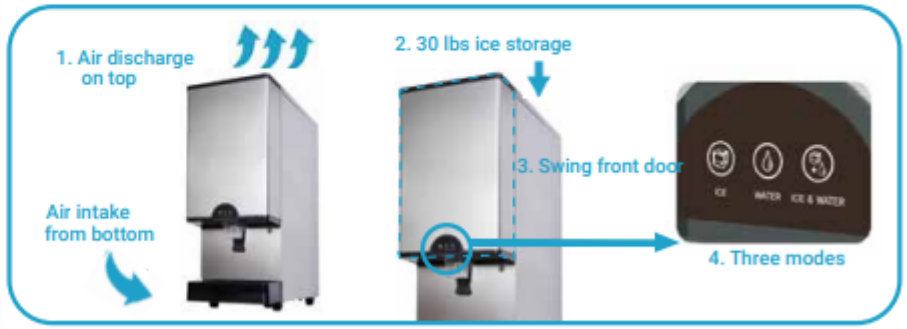

1. Counter top and air flow from bottom to top
2. 30 lbs ice storage
3. Swing front door for easy maintenance
4. Serving ice, water, ice and water by three modes

ID-0450 Specs

ID-0450-AN

ICE / WATER DISPENSER

PLAN VIEW

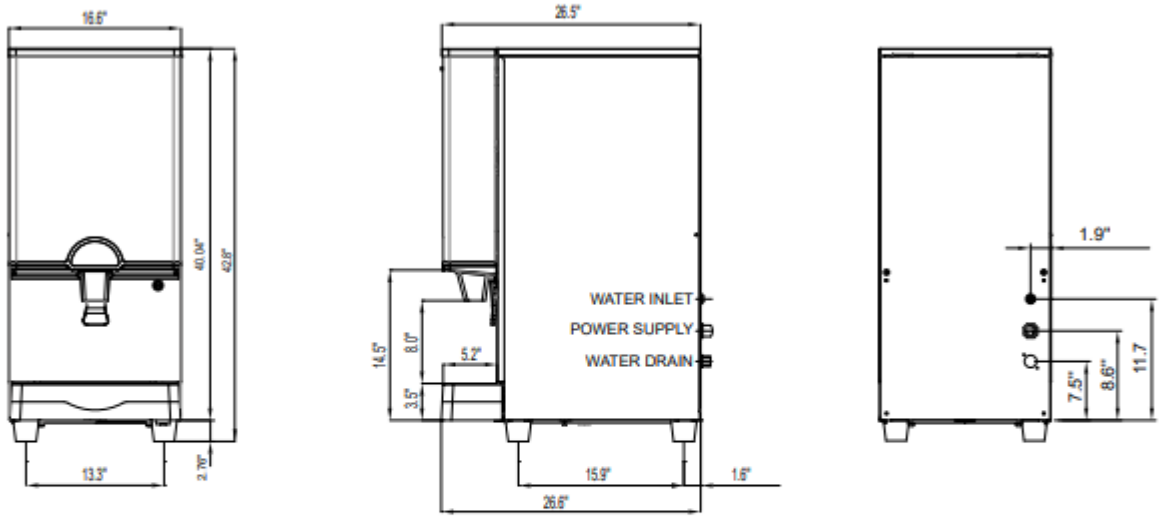

FRONT VIEW | SIDE VIEW | BACK VIEW

MODEL	DIMENSIONS	WIDTH	DEPTH	HEIGHT	WEIGHT	
ID-0450-AN	Inch	16.6"	26.5"	43.1"	203 lbs (Net)	223 lbs (Shipping)

SPECIFICATIONS

Model	Ice Type	Ice Production 24 hrs		Water usage Gal / 100 lbs ice	Power kWh / 100 lbs ice	Electrical (V/Hz/ph)	Condenser	Minimum Circuit Breaker (A)
		Air/Water 70ºF / 50ºF	Air/Water 90ºF / 70ºF					
ID-0450-AN	Nugget	378 lbs	289 lbs	12	7.28	115 / 60 / 1	Air Cooled	15

OPERATING LIMITS	MIN	MAX
AMBIENT TEMP RANGE	50 ºF	100 ºF
WATER TEMP RANGE	50 ºF	90 ºF
WATER PRESSURE	20 psi (1.38 bar)	80 psi (5.52 bar)

ID-0450 Specs

All equipment leaves our distribution points in new condition.

When receiving new equipment, please pay close attention to the packaging for any damage to the crating. If there appears to be any exterior damage, please either note the damaged on the delivery bill of lading OR refuse it.

Failure to note damage on BOL or refuse damaged equipment means that the receiver accepts all liability for damaged equipment.

Damage

Receiving & Unpackaging Dispensers

ICETRO America

Installation, Start Up, and Check

Please double check these items before install & start-up before calling for service.

(These items are not covered under your Labor Warranty)

1. Has all tape and packing materials been removed from Machine?
2. Is the unit installed in a location that is away from heat generating equipment or direct sunlight?
3. Is the unit level front to back and side to side? This unit is equipped with legs which are adjustable from 3.25” – 4” in height.
4. Is the correct electrical power provided? Ensure the unit has the specified voltage and amperage and is on a dedicated circuit. Do not use a drop cord or power strip with any ice machine. This could cause a voltage drop and compensatory amperage spike or cause the circuit breaker to trip.
5. Check drain line pipe sizes. Insure they are ¾ inch and line drops ¼ inch per foot of run to insure both machine and bin drainage is effective.
6. Is water supplied to the unit? Water Line size, 3/8 inch, must be supplied to ensure sufficient water flow is always available. Required water pressure is 20 psi minimum and 80 psi maximum. This unit is designed to work with water temperatures of 50°F - 90°F.
7. Is the unit installed in an area with sufficient ventilation on top for proper rejection of condenser heat and maintenance? The manufacturer requires 30” of clearance above the unit for maintenance and service. Never block the top vents on the unit! Fresh air is taken in from the bottom and dispelled from the top.
8. This unit is designed to work in ambient air temperatures of 50°F - 100°F.
9. Scale or Mold build-up can affect the sequence of operation and production. Is a water filter installed? We recommend our exclusive Citryne Pro Ice Filtration for the best results. Scale will increase operating costs and reduce or shut down the machine’s performance.
10. Do not install this unit outdoors.

Proper Installation
ID-0450

Ensure the power switch is set to ‘ON’ and the ICE-OFF-WASH switch is set to ‘ICE’.

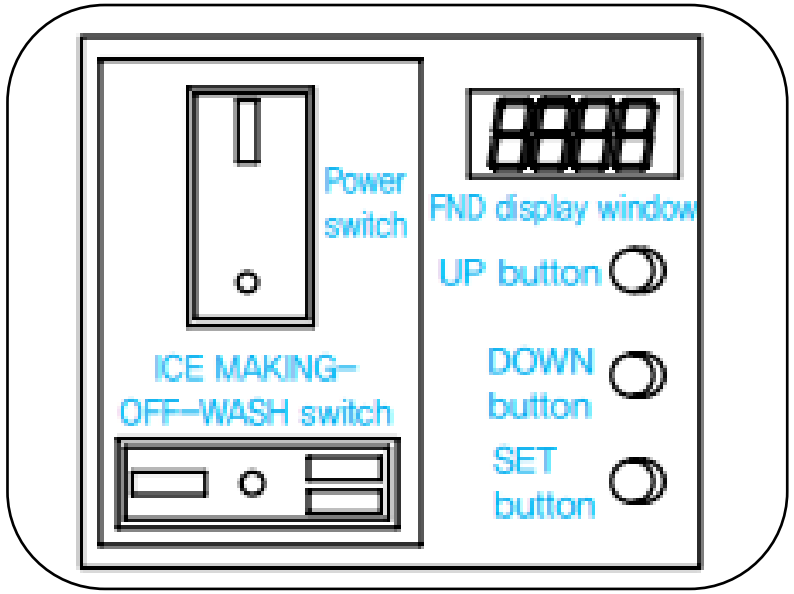

Ice will begin to enter the hopper after 3 minutes of the compressor & condenser fan being energized.

You can begin to use the ice 10 minutes after that and the hoper will be full of ice after about 70 minutes.

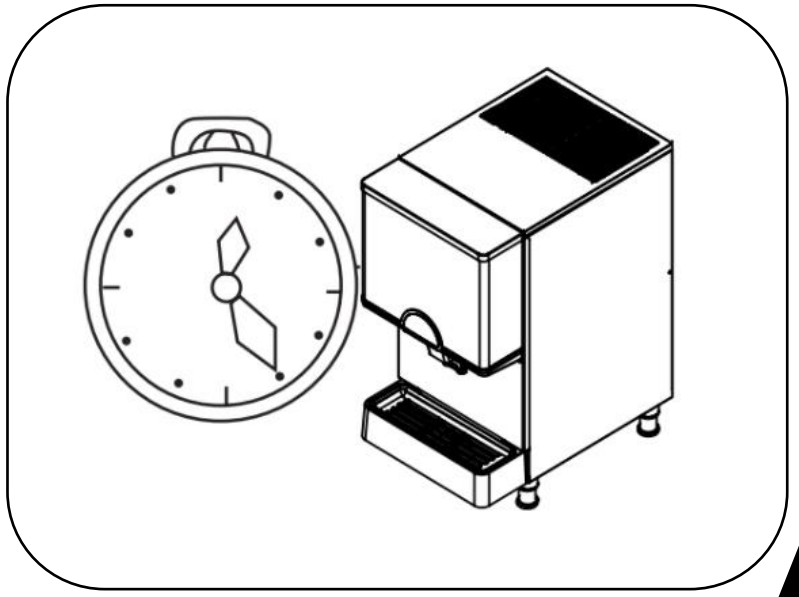

Proper Installation
ID-0450

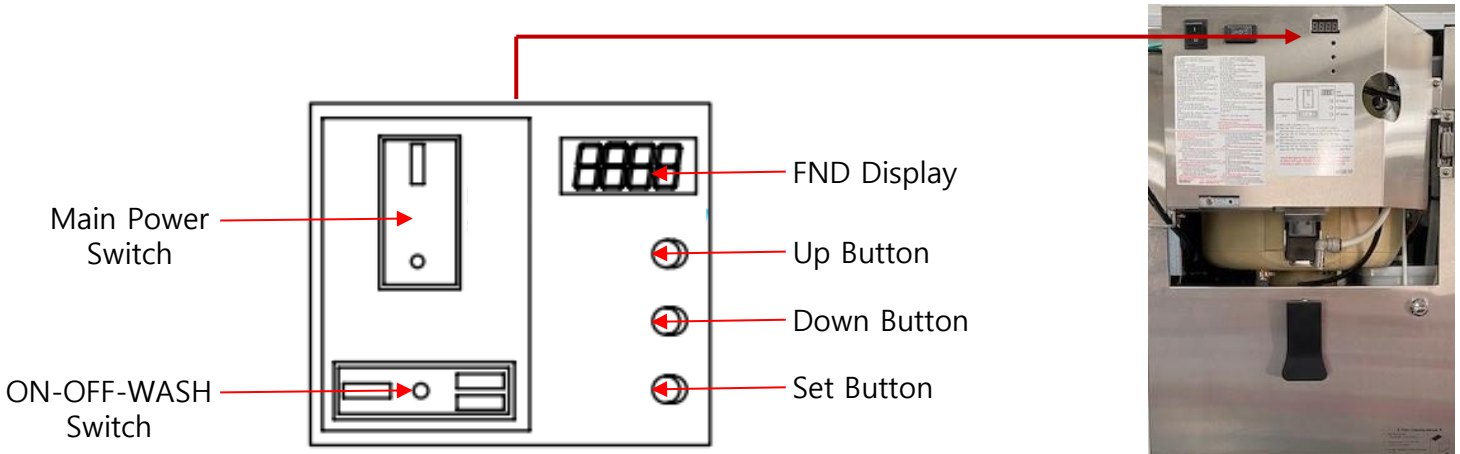

1) Forced Drain Function: (Must be used to prevent water from freezing in winter storage.) Please also use this function to drain water before cleaning any internal parts.
   - Turn on the main power switch. Press the "DOWN" + "MODE" buttons simultaneously for 3 seconds on the FND panel. Water will then purge from the water sump for 30 seconds.
2) Automatic Drain Function:
   - Turn on the main power switch. Press the "MODE" button until F. 5 is displayed on the FND.
   - The 1st & 2nd digits displayed is the drain time (2 seconds) and is adjustable in 1 second increments, up to 99 seconds.
   - The 3rd & 4th digits displayed is the drain interval (1 hour) and is adjustable in 30 minute increments from 0.5 to 9.5 hours
3) Initial Water Draining Function:
   - Turn on the main power switch. Press the "MODE" button until F. 4 is displayed on the FND.
   - The 1st & 2nd digits displayed is the drain time (30 seconds) and is adjustable in 1 second increments, up to 99 seconds.
   - The 3rd & 4th digits displayed is the number of repetitions (3 times) and is adjustable from 1 to 9 times.

Error codes are also listed in the owner's manual.

Flexible Numeric Display (FND) on ID-0300

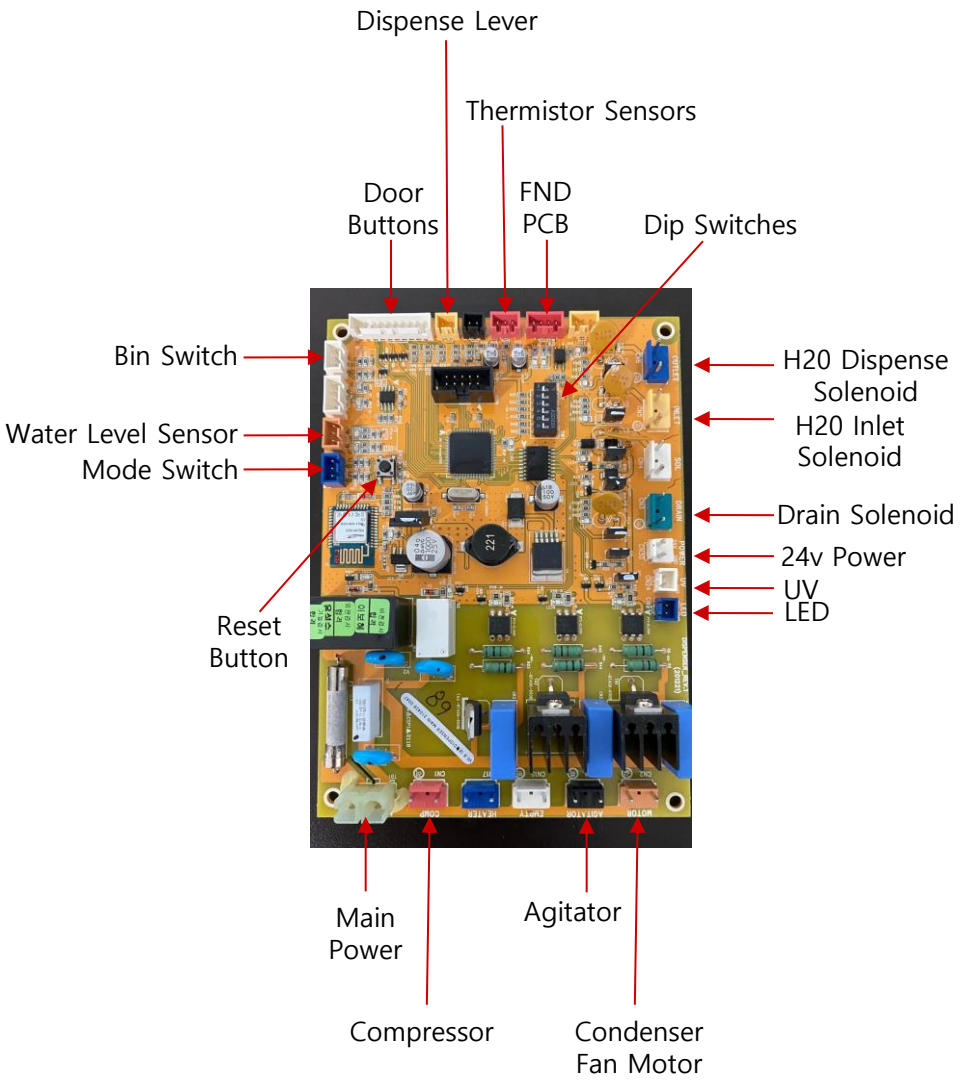

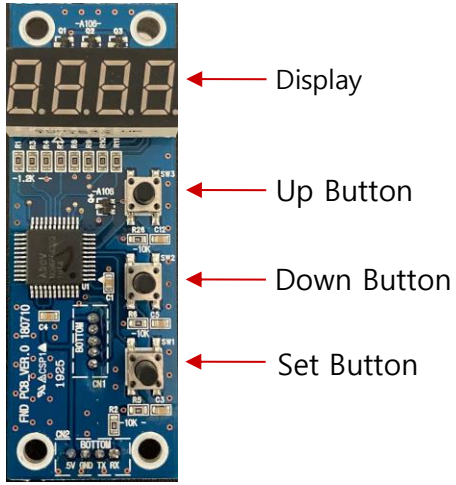

FND Board

PCB connections are clearly marked and have LEDs to indicate to the technician when certain parts are powered.

By separating the main PCB from the FND, Icetro has managed to keep the cost of a replacement PCB lower than all its competitors!

ID-0450
PCB & FND

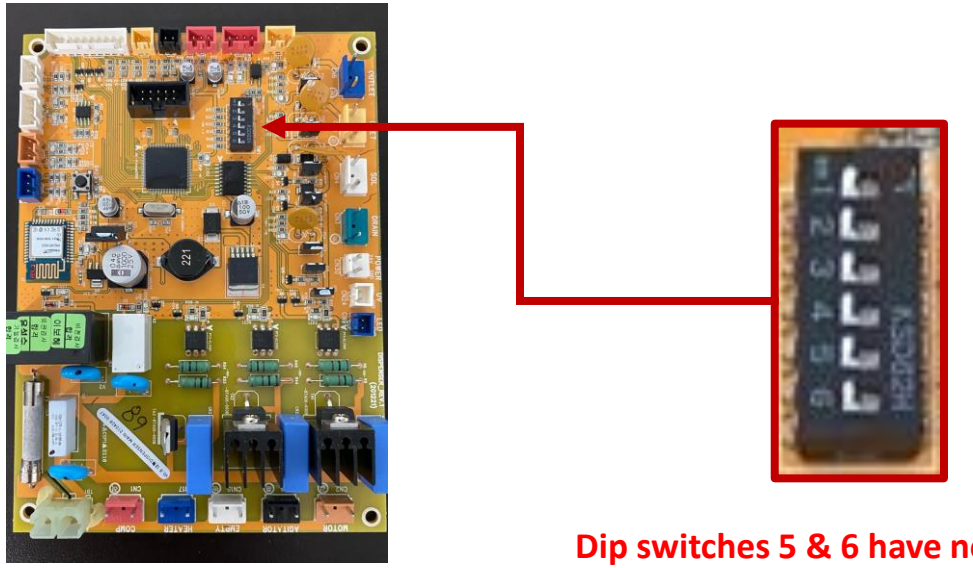

Dip switches 5 & 6 have no function.

	Dip #1	Dip #2	Dip #3	Dip #4
	Mode	Er13 Sensing Temperature	Set high pressure sensing method	Enable Safety
ON	CVS	Detection: 149°F, Release: 113°F	Use by connecting HPS	ID-0160 = Front Cover ID-0450 = 2nd Safety Switch
OFF	Normal	Detection: 136°F, Release: 122°F	Determine Er13 by condenser outlet temperature	Not Used ID-0300
		Detection: 149°F, Release: 122°F (Only ID-0450)		

CVS is a function used in Korean convenience stores, where the three front buttons (Ice, Ice + Water, Water) are all used exclusively as Ice buttons (Large, Medium, Small).

ID-0450
PCB & FND

Front

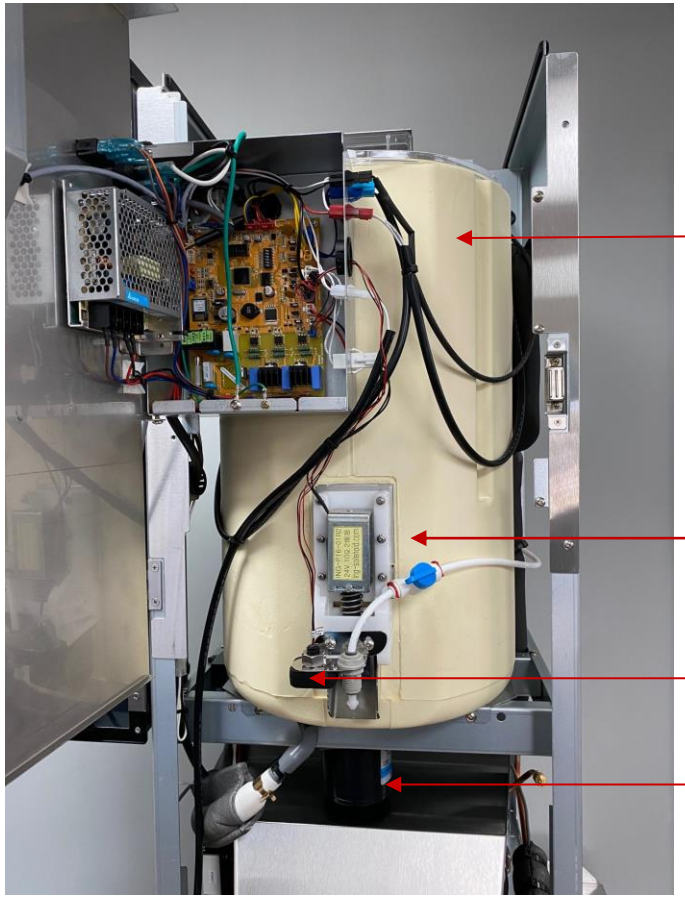

Ice Dispensing
Solenoid

Dispensing solenoid valve only opens when dispensing ice, preventing airborne bacteria from growing inside of the ice hopper!

Our dispensers also utilize UV light!

ID-0450 Exposed

Back

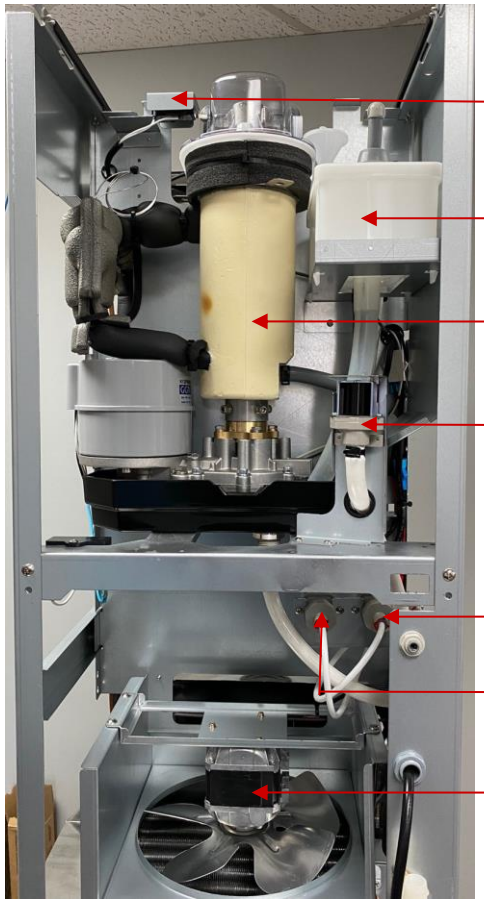

Easy access the condenser, fan motor, & more for easy service & diagnosis!

Condensers bring in air from the bottom and exhausts from the top.

ID-0450 Exposed

Right Side

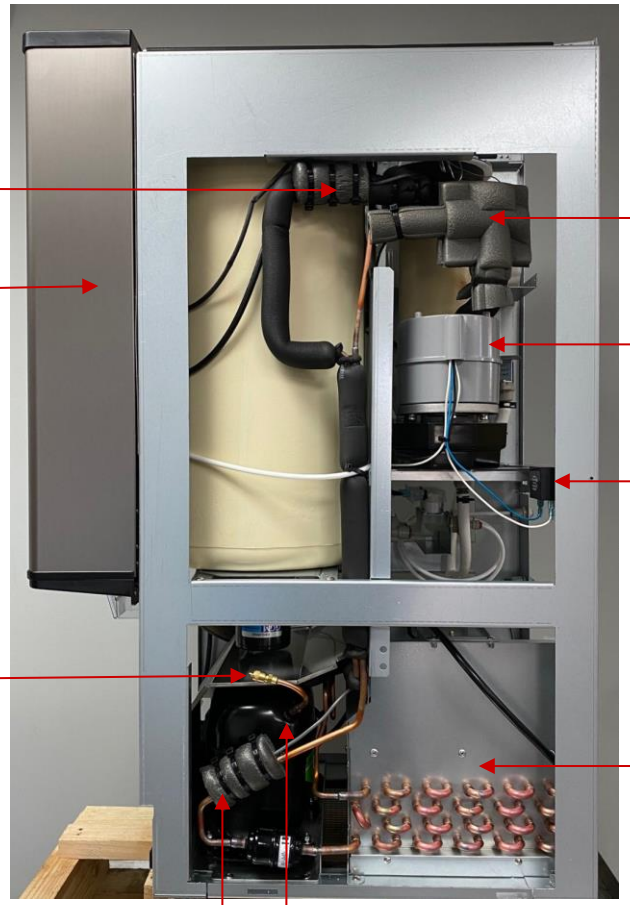

Easy access the other major components, such as the txv, gear motor, water reservoir, thermistors and more!

ID-0450 Exposed

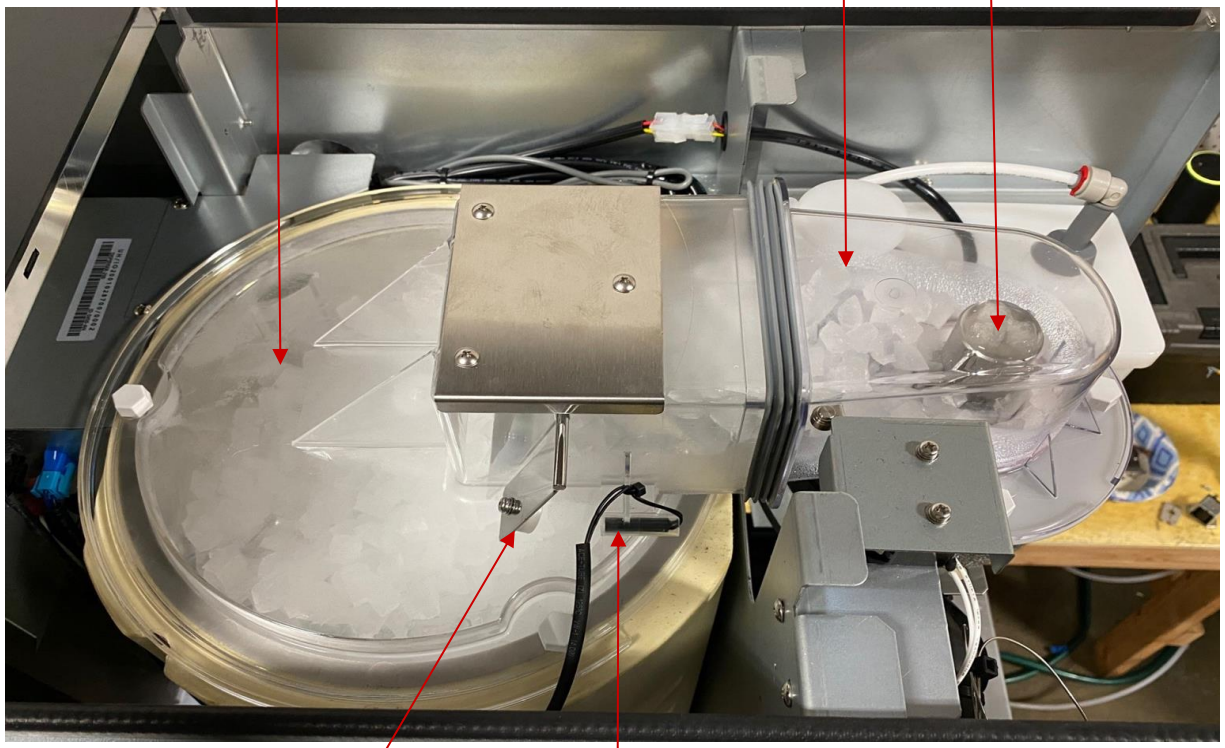

Here you can clearly see how the evaporator feeds ice up to the extruder cap/breaker and then pushes it to the front of the machine, where the hopper stores the ice for consumption.

The ice hopper uses a separate motor from the evaporator for agitation and dispensing.

ID-0450 Exposed

Spiral circular cutting blade designed to reduce gearbox torque and provide greater durability.

Tapered flight reduces torque.

Spring loaded carbon/ceramic mechanical seal.

Pin cut spring insertion in bottom of flight.

Spline cut fits into reverse spline coupling on gear box shaft, which ensures no imbalance in bottom bearing.

Extruder Heads & Bearing

Nugget Extruder Head

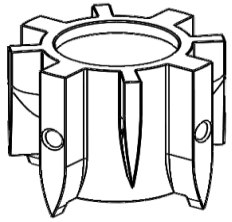

Nugget Extruder

- Carbon bearing is pressed inside of extruder head.
- No grease or maintenance to prevent major mechanical breakdowns.
- Simply check extruder/bearing & replace if required.

Extruder with Carbon Bearing Pressed Into Place

Visually inspect all hex head bolts holding lower housing assembly to evaporator barrel for leaks.

Use caution during reassembly to ensure new bolts are cross tightened evenly.

Drains have been enlarged to prevent overflow & scale buildup on critical parts.

Maintenance & Leaks

Poor maintenance, leaking gaskets/bolts, or a plugged drain can destroy a machine: If bolts at the top extruder or lower housing assembly leak, scale can build up on the urethane insulation, the lower housing assembly, and/or the gear box and destroy those parts.

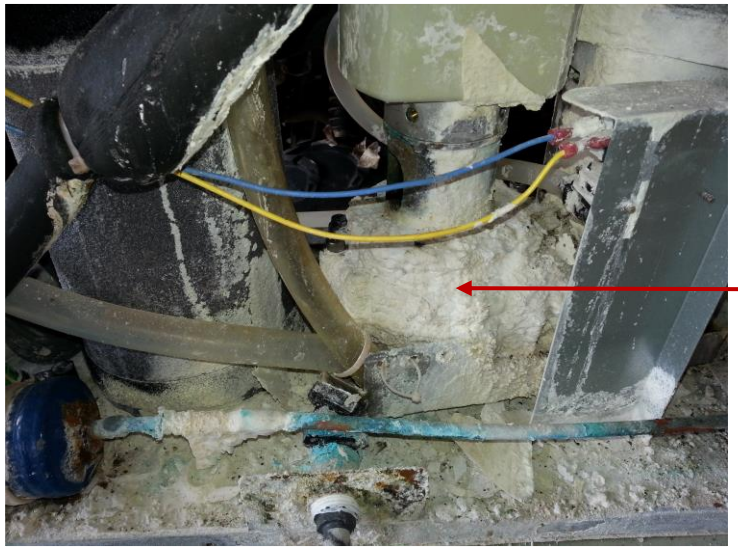

Should the drain pan's drain line become plugged, it will overflow and cause scale to greatly damage unit.

When removing bolts, new o-rings and/or new bolts with o-rings should be used.
If bolts are not tightened properly (or o-rings damaged) the leaks above will occur.

Maintenance & Leaks

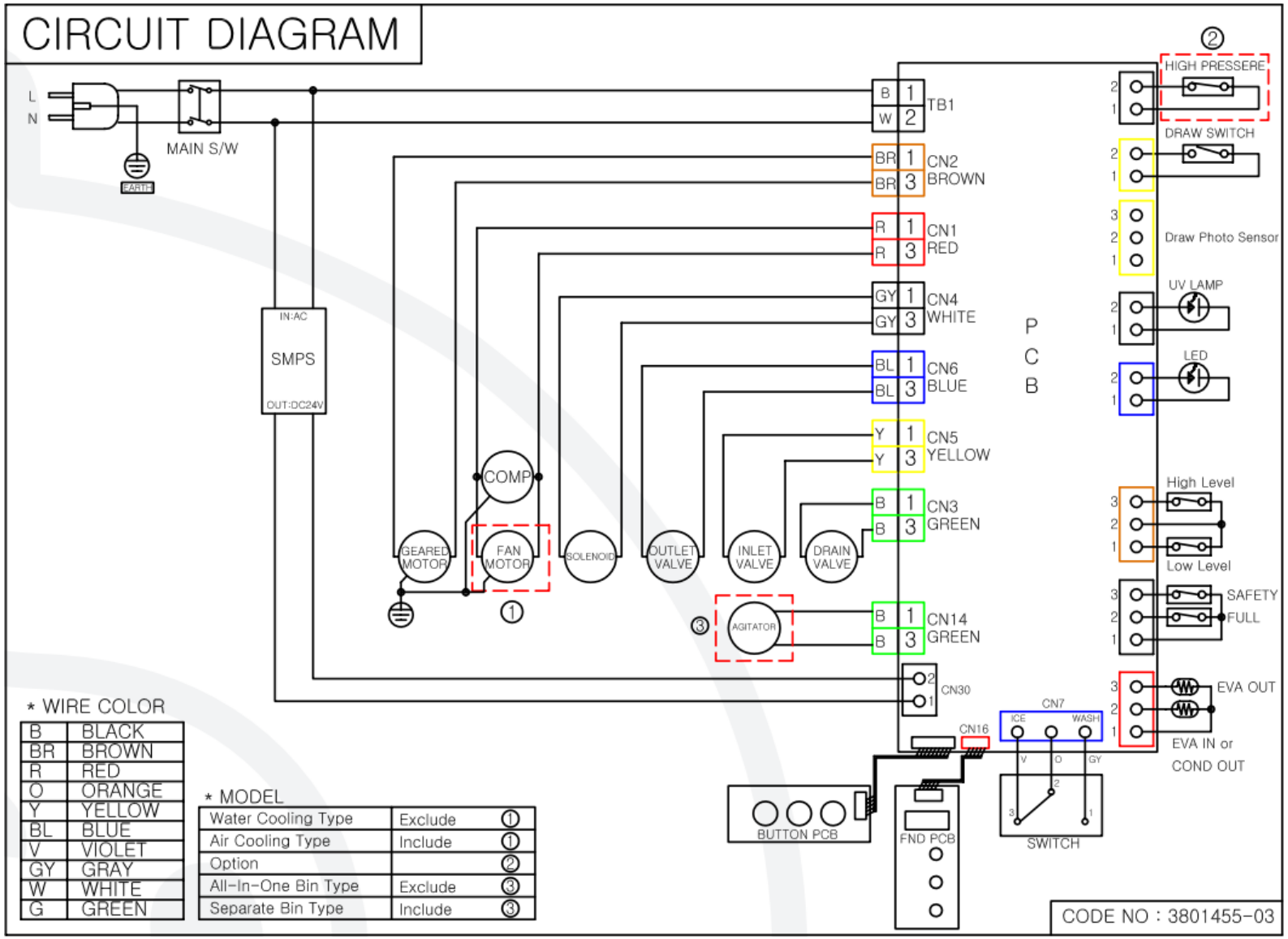

Wiring Diagram

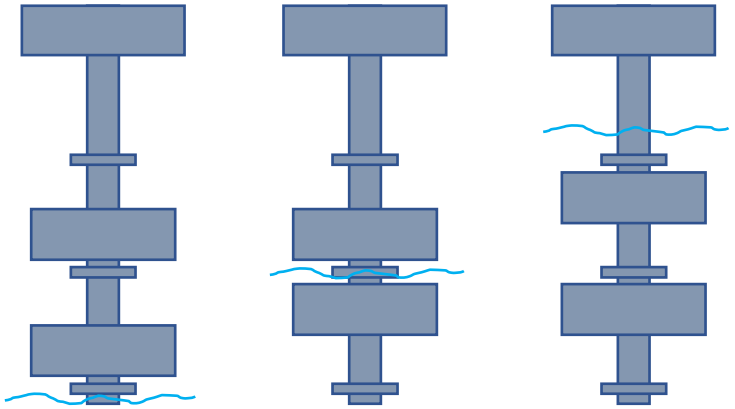

Water tank Empty | **The water only fills to the lower part.** | **Water tank Full**

Float Sensor		Water valve operation	Physical state
High water level sensor	Low water level sensor		
0(Close)	0(Close)	ON	Water tank Empty
0(Close)	1(Open)	The current operation continues.	The water only fills to the lower part.
1(Open)	0(Close)	The current operation continues.	No definition (Physically impossible)
1(Open)	1(Open)	OFF	Water tank Full

Water valve operates separately according to the water level sensor

Dispenser Float Switch

Item	Contents
Initial power-up. ICE-OFF-WASH switch is in The 'Ice' position.	1. Water inlet solenoid energized for 20 seconds for initial water reservoir fill. 2. Dump solenoid energized for 30 seconds & then water inlet solenoid energized for 10 seconds. (This occurs 3 consecutive times) 3. Gear motor is energized. 4. After 60 seconds of the gear motor being energized, the compressor & condenser fan motor are both energized. 5. Ice begins to enter the ice hopper after 3 minutes of the compressor being energized.
Ice Hopper Full	1. When bin switch opens for 2 consecutive seconds, the machine is recognized as being full and the compressor & condenser fan motor are de-energized. 2. Gear motor continues to run for 60 seconds & is then de-energized.
Ice Hopper Low	1. When bin switch closes for 2 consecutive seconds, the machine returns to the ice making mode and the gear motor is energized. 2. After 60 seconds of the gear motor being energized, the compressor & condenser fan motor are both energized.
Water Inlet Solenoid	1. Energized when low level/high level float switch is in the NC (down) position. 2. De-energized when high level float is in the NO (up) position. 3. Triggers error code (Er15) when the high-level float is not detected after operating for 60 seconds.
Gear Motor	1. Energized when the high-level float is detected. 2. Stops after a 60 second delay when bin switch opens. 3. After 1 hour of no operation, gear motor will energize for a 12 second agitation. This will continue every hour until the bin switch closes and normal operation resumes.
Compressor	1. Energized 60 seconds after the gear motor is energized. 2. Stops immediately when the bin switch opens, indicating the ice hopper is full.

Detailed Operation Sequence

Item	Contents
Dump Solenoid	1. Energized for 2 seconds after 1 hour of machine operation. 2. This is repeated indefinitely until the power is turned off.
Dispense Lever Operation	1. Chose a dispensing option (ice, water, or ice + water) and place cup against lever to engage it. 2. If dispensing lever is released and immediately engaged again, there will be a 2 second delay before any solenoids will activate, regardless of which mode is selected. 3. Once the dispensing lever is disengaged, all operation stops immediately.
Ice Dispensing Solenoid (Ice Mode)	1. Energized when the dispensing lever is engaged, and the N/O switch is closed. 2. De-energized when the dispensing lever is released, and switch opens again. 3. Maximum operating time is 20 seconds by default but can be changed. 4. If ice hopper is full, the gear motor will also energize to dispense ice.
Ice & Water Dispensing Solenoid (Ice + Water Mode)	1. Ice & water solenoids are both energized simultaneously when the dispensing lever is engaged, and the N/O switch is closed. 2. Maximum operating time of the ice solenoid is 5 seconds by default but can be changed. 3. Maximum operating time of the water solenoid is 3 seconds by default but can be changed. 4. If ice hopper is full, the gear motor will also energize to dispense ice.

Detailed Operation Sequence

Item	Contents
Water Dispense Solenoid (Water Mode)	1. Energized when dispensing lever is engaged. 2. Stops when dispensing lever is disengaged. 3. Maximum operating time is 5 seconds.
Time Counter	1. Gear Motor utilizes a counter to track the number of hours in active operation. 2. At 10,000 hours, the LED of the current selected mode will blink for 5 seconds & will continue the initial mode selection. 3. At 11,0000 hours, the LEDs of all mode buttons will blink for 5 seconds each hour. 4. To reset the counter, place dip switch 2 in the 'ON' position and press the reset button on the main PCB. 5. When dip switch 2 is 'ON' the LEDs on all mode buttons will blink from left to right, and none of the dispenser functions will work, until dip switch 2 is placed back in the 'OFF' position.
ICE → OFF	1. Compressor stops immediately. 2. Gear motor stop after a 60 second delay.
OFF → WASH	1. Gear motor is energized for 5 minutes. 2. Dump solenoid is energized for 1 minute. 3. Water solenoid is energized until the high-level float sensor opens. 4. Gear motor is energized for 1 minute. 5. Dump solenoid is energized for 30 seconds. 6. Steps 3-5 are executed 2 more times and the machine stops.

Detailed Operation Sequence

Item	Contents
Forced Drain	1. Turn ICE-OFF-WASH switch to the ‘OFF’ position. 2. At the FND, press the ‘Down’ + ‘Mode/Set’ buttons simultaneously for 3 seconds. 3. Dump solenoid will energize for 30 seconds.
Error Code Indication	1. When error codes 1, 6, 13, 14, 15, 16, & 25 occur, and the machine stops, the LEDs of all mode buttons will blink sequentially until the issue causing the error has been fixed and the machine is reset by turning the ICE-OFF-WASH switch to the ‘OFF’ position and then back to the ‘ICE’ position.
Reset to Default	1. Turn the ICE-OFF-WSH switch to the ‘OFF’ position. 2. At the FND, press the ‘UP’ + ‘DOWN’ + ‘MODE/SET’ buttons simultaneously for 3 seconds. 3. All timed settings will default back to their factory settings.

Setting Adjustments: Function Codes

F.1 (Maximum Discharge Time)
Maximum operating time of the ice solenoid: 20-second default.
(Adjustable from 5 seconds – 30 seconds, in 1 second increments)

F.2 (Complete Removal Of Ice In Hopper)
ICE/OFF/WASH switch is set to OFF.
Hold the ICE & WATER buttons simultaneously for 4 seconds, until they light solid.
Ice solenoid will operate continuously when dispense lever is pushed.

F.3 (Timed Ice Dispensing Function)
When either ICE or WATER + ICE is selected, ice is dispensed for a set time.
This function does not work when the ICE/OFF/WASH switch is set to OFF.
(Adjustable from 1 – 99 seconds, in 1 second increments)

F.4 (Initial Water Purge)
Happens when ICE/OFF/WASH switch is first moved to ICE.
First 2 digits indicates the total drain time: 30-second default.
(Adjustable from off – 99 seconds, in 1 second increments)
Last 2 digits indicates the number of flushes: 3-time default.
(Adjustable from 1 – 9 times)

F.5 (Periodic Drain Function)
Only operates when ICE/OFF/WASH switch is set to ICE.
First 2 digits indicates the total drain time: 2-second default.
(Adjustable from off – 9 seconds, in 1 second increments)
Last 2 digits indicates the interval: 1 hour default.
(Adjustable from 0.5 – 9.5 hours, in 30-minute increments)

F.6 (WATER + ICE volume control)
First 2 digits indicates the total ice dispensing time: 5-second default.
(Adjustable up to 99 seconds)
Last 2 digits indicates the total water dispensing time: 3-second default.
(Adjustable up to 99 seconds)

Detailed Function Description

Setting Adjustments: Function Codes

F.7 (UV Lamp Time Adjustment)
First 2 digits indicates the total time on: 3-minute default.
(Adjustable up to 99 minutes)
Last 2 digits indicates the total time off: 1-hour default.
(Adjustable up to 9 hours)

F.8 (Service Notification Setting)
After 1,000 hours of use, the selected mode button blinks for 5 seconds: A_1.0
After 11,000 hours of uses, all 3 mode buttons blink for 5 seconds: E_11

F.9 (Cumulative Run Time)
The FND displays the date format in YEAR, MONTH, DAY, and HOURS, from right to left.
The cumulative run time is displayed in hours.
(Example: 12 months = year, 30 days = month, 24 hours = day)
F.10 (Temperature Unit Displayed)
Change temperature unit between Fahrenheit and Celsius.

F.11 Liquid line thermistor temperature.

F.12 Suction line thermistor temperature.

F.13 (ICE+WATER Dispense Sequence)
A = ice and water dispensed sequentially
B = ice and water dispensed simultaneously

F.14 (Wash Counter)
Counter will display number between 0 – 999.

F.15 (Motor & Wash Reset Counter)
First 2 digits: Motor reset
Last 2 digits: Wash reset

Detailed Function Description

Setting Adjustments: Function Codes

F.16 CVS Small Cup Ice Dispensing Time (seconds)

F.17 CVS Large Cup Ice Dispensing Time (seconds)

F.18 (Set Automatic & Manual Switching of Buttons)
Last 2 digits indicates the standby time setting.

F.19 Open for future function (N/A)

F.20 (Agitation Timing)
First 2 digits indicates the agitation intervals: 1-hour default, displayed as 1.0
(Adjustable in 6-minute increments)
Last 2 digits indicates the agitation time: 10-second default, displayed as 11
(Adjustable in 1-second increments)

Reset to default values:
Press all 3 of the FND buttons (UP, DOWN, & SET) simultaneously for 4 seconds.

Detailed Function Description

NOTICE

In case of an error, the front selection buttons (ICE-WATER-ICE & WATER) will light up alternatively from left to right.
When this happens, open the door and press the 'SET' button on the FND to display the error code on the display screen.

Display	Error Type	Cause	Action to Take
Er01	Evaporator Temp Error	Evap temp is over 32°F after 30 minutes after ice making.	Check for refrigerant leak. Check S/L thermistor.
Er03	Evaporator Temp Error	Evap temp exceeds 30°F after 10 minutes of ice making.	Check for refrigerant leak. Check S/L thermistor.
Er06	Thermistor Error	Displayed when S/L thermistor is OPEN/SHORT.	Check S/L thermistor.
Er07	Thermistor Error	Displayed when L/L thermistor Is OPEN/SHORT.	Check L/L thermistor.
Er13	High Pressure Switch Error	Occurs when the condenser is dirty, fan motor is not running, or fan blade has broken.	Clean air filter/condenser. Replace fan motor or broken fan blade.
Er14	High Pressure Switch Error	Occurs when the high-pressure switch opens 3 times or more.	Check high pressure switch. Check refrigerant charge. Check air filter/condenser. Check fan motor.
Er15	Water Supply Error	When the water level sensor detects no water for 120 seconds.	Check water supply. Check water pressure. Check water sensor. Check water inlet solenoid.
Er16	Water Level Sensor Bad	When the water level sensor's lower/upper limits are not sensed 60 seconds after starting ice making cycle.	Check and/or replace water level float switch. Check and/or replace dump valve. Check and/or replace the PCB.
Er20	Cover Error	Displayed when the extruder cover is open or secondary bin switch is open or bad.	Replace cover or secondary bin switch.
Er25	Gear Motor Restraint Error	L/L & S/L thermistor -4°F or less 3 times is a row. Ice jam, scale buildup, or auger/agitator issue.	Clear ice jam. Check water supply. Check motor & gear box. Check for scale buildup. Check auger/agitator. Check L/L & S/L thermistors.

Service Fault Diagnosis
ID-0450

Operating status	What to check		Action
Gear Motor and compressor run, but intermittently	1) Pressure switch (HPS)	1) Is the condenser and/or filter dirty? 2) Is the ambient or water temperature too high? 3) Is the condenser fan not spinning, slow, or have a broken fan blade? (Air-cooled) 4) Is the refrigerant overcharged? 5) Is the refrigerant line and components normal? 6) Is it a bad contactor? 7) Are the contactor connections loose?	1) Clean air filter and/or condenser. 2) Place machine in cooler environment and check the water supply. 3) Replace the fan motor or fan blade after determining which is the issue. 4) Vacuum and recharge the refrigerant. 5) Clean and replace the dryer. 6) Check the connections and replace if defective. 7) Check and fix connections.
Gear Motor works, but the compressor does not run or runs intermittently.	1) Compressor relay (PCB)	1) Is there a poor connection? 2) Is the PCB sending power to the compressor?	1) Check the connections. 2) Replace PCB if defective.
	2) Operation relay	1) Is there a poor connection? 2) Is the relay blown?	1) Check the connections and replace if defective. 2) Replace.
	3) Start/run capacitors, & OLP.	1) Bad parts?	1) Test and replace if necessary.
	4) Compressor	1) Are the connections loose? 2) Is the winding shorted or fused? 3) Is the overload prevention open?	1) Check and connect correctly. 2) Replace compressor. 3) Check for high temperature or over current. Ensure the OLP is not open. Cool compressor if necessary.
	5) Power Supply	1) Is the circuit current ampacity low?	1) Replace with correct breaker size.
Gear Motor and compressor work, but no ice is produced.	1) Refrigerant line 2) Refrigerant restriction/bad part 3) Water supply	1) Is there a refrigerant leak? 2) Check for restrictions 3) Is water being supplied to the evaporator?	1) Check the refrigerant for leaks with a leak detector, re-braise the leak and replace the dryer, evacuate and charge with refrigerant. 2) Replace parts containing blockage or restricting the flow of refrigerant. 3) Ensure the water reservoir is full.

Service Fault Diagnosis

Operating status	What to check		Action
Low ice yield	1) Refrigerant	1) Is there a refrigerant leak? 2) Is the refrigerant line blocked? 3) Is the refrigerant under/overcharged?	1) Check for leaks with a leak detector, repair the leak and replace the dryer, evacuate and charge with refrigerant. 2) Replace any clogged parts. 3) Recover, evacuate, and recharge with refrigerant.
	2) High-side pressure is too high	1) Is the condenser and/or filter dirty? 2) Is the ambient or water temperature too high? 3) Is the condenser fan not spinning, slow, or have a broken fan blade? (Air-cooled)	1) Clean the air filter and/or condenser. 2) Place machine in cooler environment and check the water supply. 3) Replace the fan motor or fan blade after determining which is the issue.
	3) Expansion valve (TXV)	1) Is the low-side pressure too low or too high?	1) Replace if stuck open or closed. 2) Check that the bulb on the expansion valve is properly installed and replace it if necessary.

Operating status	What to check		Action
Abnormal noise	1) Fan motor	1) Are the bearings worn? 2) Is the fan blade deformed or broken? 3) Is fan blade hitting the shroud?	1) Replace motor. 2) Replace fan blade. 3) Check alignment and/or replace fan blade.
	2) Compressor	1) Is the bearing worn or the cylinder valve broken? 2) Is the rubber bushing assembled correctly?	1) Replace compressor. 2) Readjust the bushing assembly position.
	3) Refrigeration Line	1) Is it caused by contact with refrigerant line components?	3) Realign or replace if necessary.
	4) Gear Box	1) Are the bearings or gears worn and damaged?	1) Replace gear box.
	5) Evaporator	1) Are the auger bearings worn out? 2) Is there a scale inside the evaporator cylinder?	1) Check & replace if necessary. 2) Disassemble the auger and related parts, descale and clean with descaling agent. (Periodically)
Water overflow from the sump(Overflow)	1) Water supply	1) Is the water supply pressure too high (above 80psi)?	1) Install a water pressure reducing valve.
	2) Water supply valve	1) Does the water inlet solenoid valve close?	1) Clean or replace the valve.
	3) Water level sensor	1) Is connection bad or is the sensor reading properly?	1) Check the connections and replace if defective.
Gear Motor 'MOTOR ERROR' flashes frequently	1) Power supply	1) Is the voltage too high or too low?	1) Connect the power to the rated voltage.
	2) Ice making unit	1) Are the bearings (E-Head and Housing) or Auger worn?	1) Replace bearing or auger.
	3) Tachometer	1) Is motor rotation bad?	1) Check the capacitor. 2) Replace the gear motor.
	4) Gear Motor or Gearbox	1) Is the motor or gearbox rotation bad?	1) Check the capacitor. 2) Replace the gear motor.

Service Fault Diagnosis

Resetting the auger usage time counter:

When the auger usage time reaches 11,000 hours, the selected dispensing button will flash every 0.8 seconds.
(for 5 seconds, 1 time on the dispensing selection that has been selected)

If this flash occurs, it is time for your machine's 11,000 hour preventative maintenance and a service agent should be called.
To reset this auger usage time, the main power switch must be set to "OFF".

Next, set dipswitches 1 on the PCB to "OFF". Set the main power switch to "ON" and all function lamps will flash 5 times. Then, with the power still on, set dipswitch 1 back to the "ON" position and use machine normally.

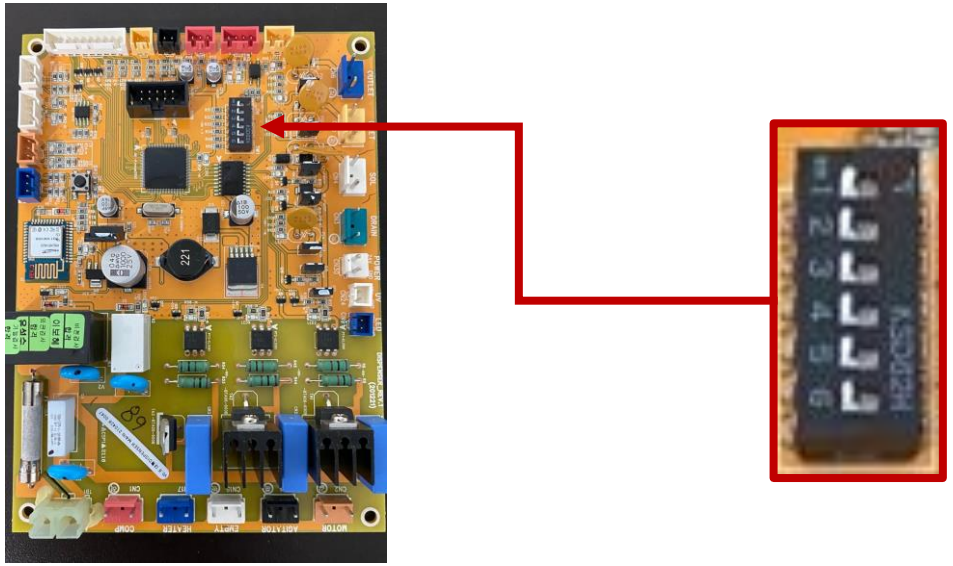

Resetting Time Counter

Service for Refrigerant Lines

! Caution !

1. All parts and screws should be fixed securely before and after the equipment is serviced.
2. Since POE oil for R-404A refrigerant absorbs moisture from the air quickly, be careful to prevent water ingress when replacing or repairing the system.
3. Always replace the filter drier when repairing the refrigeration system.
4. When replacing or repairing parts in the refrigeration system, make sure that the parts and copper piping are not "open" for more than 15 minutes.

(1) Refrigerant Recovery

When the right-side panel of the ice making unit is opened, there is an access valve on the low-pressure side of the compressor, and the service valve is used for refrigerant recovery, filling, and system vacuum. The refrigerant should be recovered in a safe container. Do not discharge into the atmosphere.

Service Port

(2) Evacuation and Recharge [R-404A]

1. Make sure to have manifold gauge, micron gauge, and vacuum pump. Ensure that the manifold hose connected to the vacuum pump is securely connected to the valve on the low-pressure side.
2. Turn on the vacuum pump. Take care that oil does not flow back from the vacuum pump.
3. Vacuum until 500 microns is reached. Vacuum time will depend on the capacity of the vacuum pump.
4. Close the low-pressure valve on the manifold gauge.
5. Remove the vacuum pump and connect the refrigerant cylinder. Please refer to the product nameplate for the correct refrigerant charge.
6. Using a scale, weigh in the system charge with R404A liquid refrigerant.
7. Disconnect manifold from the service valve of the system.
9. Replace service valve cap.

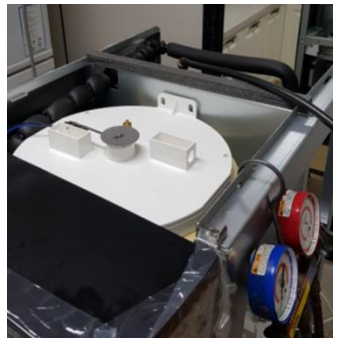

Removal & Replacement of Ice Dispensing Solenoid

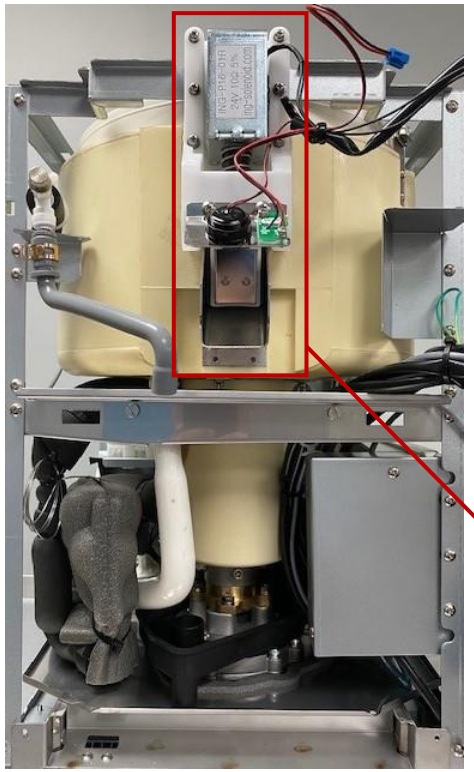

! Caution !

Before removing the ice dispensing solenoid, be sure to empty the ice hopper off any ice.
Failure to do so will result with an uncontrollable flow of ice emptied out of the hopper.

1. Remove front panel to expose the ice hopper.
2. Disconnect the solenoid wire & LED/UV light wires from the PCB.
3. Remove the 6 fixing screws from the ice dispensing solenoid.
4. Pull the ice dispensing solenoid away from the ice hopper.
5. Perform the same steps in reverse order to reassemble.

Disassembly ID-0450

Removal and Replacement of Compressor

! Caution !

Replace the filter drier every time the sealed refrigeration system is opened.

1. Turn off the power switch and either turn off the circuit breaker or unplug the power cord from the outlet and remove the front & right-side panels, as well as the metal splash shield to access the compressor.
2. Remove the compressor terminal cover from the compressor and disconnect the compressor wiring.
3. Recover the refrigerant and store it in an approved container.
4. Braze out the discharge, suction and access pipe from the compressor using torches.

! Warning !

When servicing the refrigeration system, make sure that the torch flame does not touch any wires or parts.

5. Remove the bolts holding the compressor to its base and remove the compressor from the machine.
6. Assemble the new compressor by re-using the rubber grommets from the bad compressor.
7. Clean copper tubing with sandpaper on the discharge, suction and access lines.
8. Install the compressor in the fixed position and fasten it with the bolts.
9. Connect the discharge, suction and access tubes to the compressor.
10. Braze in the access, suction and discharge pipes (do not change this order). Flow 3-4 PSIG nitrogen gas during soldering.
11. Install a new dryer.
12. Check for leaks with 140 PSIG nitrogen gas and soap bubbles.
13. Weigh in refrigerant charge. Refrigerant type and quantity are determined by product nameplate.
14. Connect the compressor wire terminals by assembling them in the correct position. Replace the protective cover.
15. Assemble the panels, connect the power, turn on the circuit breaker, and turn on the power switch.

Removal and Replacement of Expansion Valve

! Caution !

Sometimes moisture in the refrigeration system exceeds the drier's capacity, causing the expansion valve to freeze. Whenever the refrigeration system is open, replace the drier and do not open the new drier until all repairs and part replacements are complete.

1. Turn off the power switch and the circuit breaker, unplug the power cord from the outlet, and then remove the right-side panel.
2. Recover the refrigerant and store it in an approved container.
3. Remove the sensing bulb from the suction line.
4. Remove the expansion valve cover and braze out the expansion valve.
5. Braze in new expansion valve while flowing 3-4 PSIG nitrogen gas.

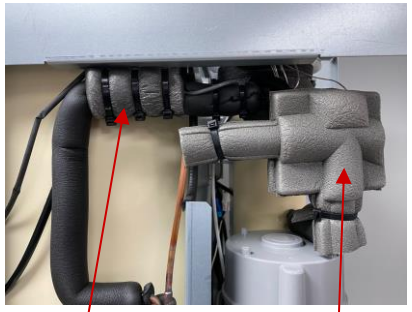

! Warning !

Wrap a wet cloth around the valve body to prevent it from heating up. (The body should not exceed 249°F when soldering.)

6. Replace with a new dryer.
7. Check that there are no leaks with nitrogen gas at 140 PSIG and soap bubbles.
8. Weigh in refrigerant charge. Refrigerant type and quantity are determined by product nameplate.
9. Replace the sensing bulb onto the suction line, tighten it with a band, and wrap it completely with insulation material (Foam PE).
10. Wrap the expansion valve (TXV) with expansion valve cover (insulation material) to prevent any air gaps.
11. Assemble the panels, connect the power, turn on the circuit breaker, and turn on the power switch.

Removal and Replacement of Water Dump Solenoid

1. Turn off the power switch and the circuit breaker, unplug the power cord from the outlet, remove the left and/or rear panel, and close the valve on the water supply line.
2. Unscrew the 2 fixing screws to remove the splash shield to gain better access to the dump valve and hoses.
3. Remove the clamps and hoses from the dump valve.
4. Disconnect the terminals connected to the dump valve.
5. Remove the 2 screws to remove coil from the body and clean diaphragm if scaled.
6. Install the cleaned/new dump valve in its original position and assemble it to the bracket.
7. Connect hoses to drain valve and fix with clamp.
8. Open the valve on the water supply line.
9. Reassemble the panels in their correct positions, connect the power cord to the outlet, turn on circuit breaker, and turn on the main power switch.
10. Switch the ICE-OFF-WASH switch to the 'ice' position to ensure that the water drains well and check for leaks.

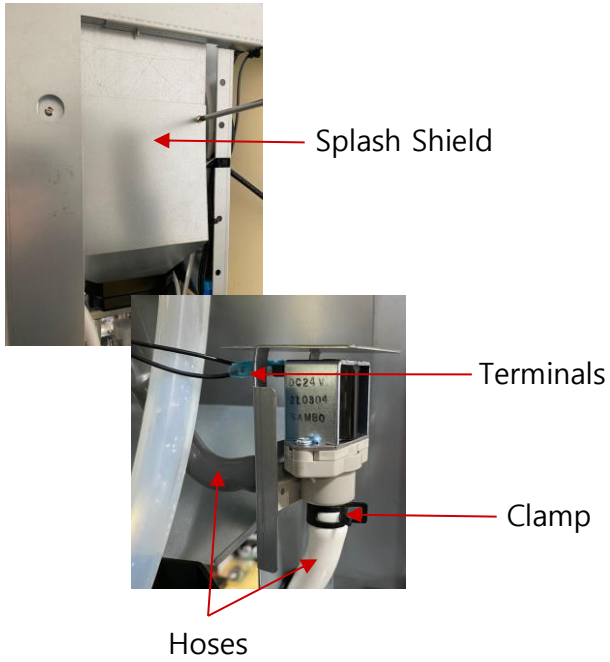

Disassembly ID-0450

Removal and Replacement of Float Switch

1. Turn off the power switch and the circuit breaker, unplug the power cord from the outlet, remove the top and back panels, and close the valve on the water supply line.
2. Lift up on the water reservoir cover to unseat it from the reservoir.
3. Remove the float switch from the reservoir cover by simply pushing up on it from under the cover.
4. Reassemble the parts in reverse order from teardown.
5. Reassemble the panels in their correct positions, connect the power cord to the outlet, turn on circuit breaker, and turn on the main power switch.
6. Open the valve on the water supply line.
7. Switch the ICE-OFF-WASH switch to the 'ice' position to ensure that the water fills/drains well and check for leaks.

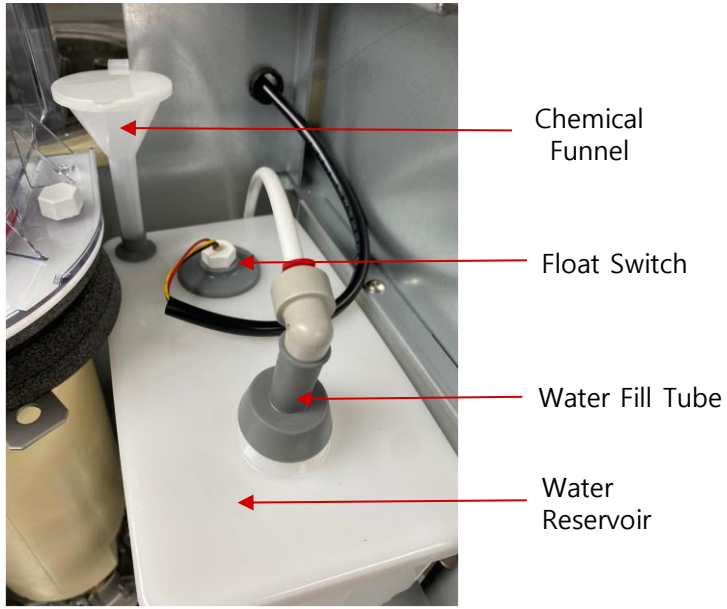

Disassembly ID-0450

Removal and Replacement of Evaporator Assembly

1. Close the water supply and drain dispenser by using the forced drain function (when FND is on, press the DOWN and SET buttons simultaneously for 3 seconds).
2. Set main power switch to OFF and remove power cord from outlet. Then remove the top and back panels.
3. Remove the EXTRUDER cover by loosening the three, white thumbscrews and pulling up on the cover to remove it.
4. Cut cable tie and remove insulation just below the white nylon plate that the cover was attached to.
5. Loosen the hose clamp and remove the extruder plate to gain better access to the extruder fixing bolts.

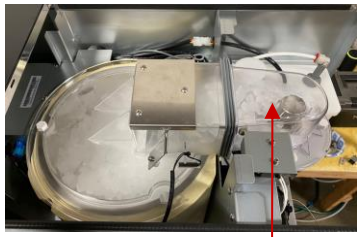

Remove the extruder cover

Remove insulation

Remove extruder plate

3 x M8 head fixing bolts

Extruder & Auger

- **Extruding Head**

1. Remove the three fixing bolts (M8) and lift the auger/extruder head out.
2. If the wear tolerance of the extruder exceeds 0.5mm (0.02”) or if there are scratches, replace it.

- **Auger**

1. Lift the auger up.
2. If the coupling contact is worn or the blade is scratched, replace the auger.

*** The mechanical seal is attached to the bottom of the auger.**

Replace the seal when it leaks at the bottom of the evaporator.

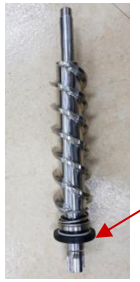

Mechanical Seal Rotor

Disassembly ID-0450

Removal and Replacement of Evaporator Assembly

- **Evaporator**

1. Recover the refrigerant and store it in an approved container.

Whenever the refrigeration system is open, replace the drier and do not open the new drier until all repairs and part replacements are complete.

2. Remove the sensing bulb from the suction line.
3. Braze out the copper pipe and expansion valve connections from the evaporator.
4. Disconnect the water hoses connected to the evaporator.
5. Remove the four bolts (M8) holding the evaporator cylinder to the housing and remove the evaporator by lifting it up, revealing the housing in full.

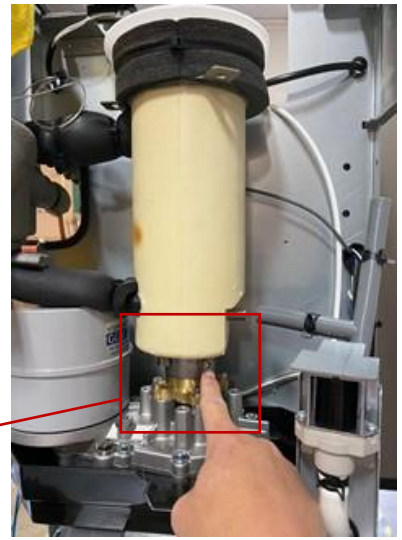

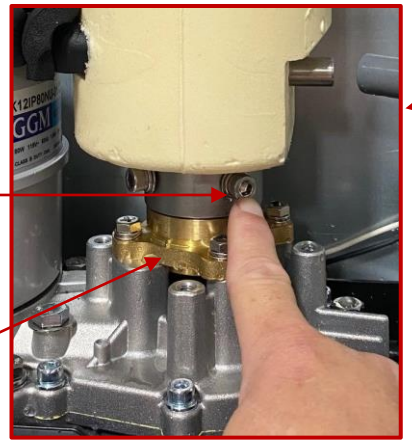

Disassembly ID-0450

Removal and Replacement of Housing, Mechanical Seal, & Gear Motor

- **Housing & Mechanical Seal**

The mechanical seal (carbon and spring) rest at the bottom of the auger shaft. The ceramic portion of the seal rests on top of the lower housing. If the contact surfaces of these two parts are worn or scratched, a leak will occur and must be replaced.

1. At this point the Auger should have already been removed from the evaporator and the mechanical seal can be removed from the bottom of the auger.
2. With the evaporator assembly separated from the housing, the ceramic portion of the seal can be removed from the bottom of the evaporator.
3. Remove the 4 bolts securing the housing to the gearbox.
4. Lift up on the housing to remove it and reveal the coupling.

- **Gear Motor & Box**

1. Loosen and remove the 3 fixing bolts (M8) that secure the gear motor and gearbox to the frame, to remove the entire assembly.
2. If you want to separate the housing from the box, you can disassemble it by loosening the 4 bolts at the bottom of the housing.
3. Removing the housing will gain access to the coupling at the bottom of the gearbox.

! Warning !

To prevent water leakage, do not scratch the surface of the O-ring, and care should be taken to prevent contamination between the mechanical seal stator and the rotor.

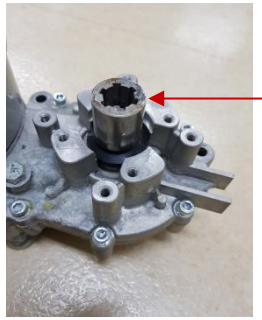

Disassembly ID-0450

Removal and Replacement of Ice Hopper & Agitator Motor

- **Ice Hopper & Agitator Motor**

1. Close the water supply and drain it by forced drain function (when FND is on, press the DOWN and MODE buttons simultaneously for 3 seconds).
2. Dispense all ice in the Ice Hopper by using the Dispensing Lever on the front of the machine.
3. Set main power switch to OFF and remove power cord from outlet. Then remove the panels.
4. Separate the harness connected to the ice dispensing solenoid assembly, LED/UV light, primary bin switch and agitator motor.
5. Remove the ice hopper cover by loosening the 3 thumbscrews.
6. Remove the breaker bar and agitator assembly by lifting them both up and out from their respective locations.
7. Remove the ice base plate by rotating it clockwise until you can push on one end, so it tilts to one side. Then lift out.
8. Unscrew the 5 fixing screws to remove the splash shield over the compressor.

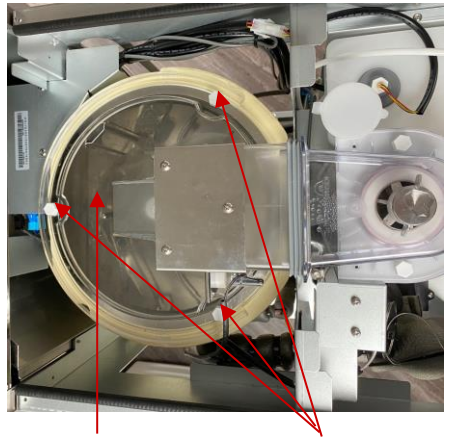

Hopper Cover

Thumbscrews (3 total)

Ice Base Plate

Breaker Bar

Agitator Assy

Agitator Motor

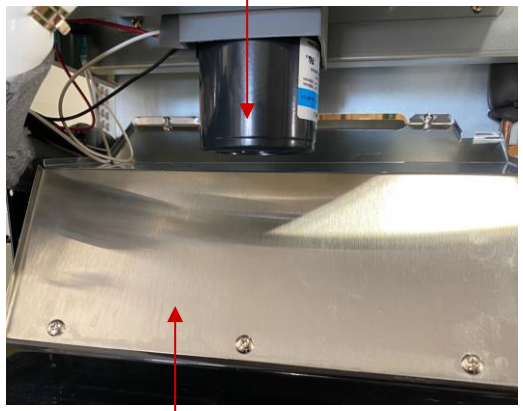

Compressor Shield

Disassembly ID-0450

Removal and Replacement of Ice Hopper & Agitator Motor

- **Ice Hopper & Agitator Motor (continued)**

9. Unscrew the 4 fixing screws under the ice hopper fastening it to the frame and remove the ice hopper and agitator motor all as one piece.
10. Once removed, turn the ice hopper upside down to expose the agitator motor and loosen the 4 fixing screws to remove it.
11. Once the agitator motor is removed, the gear box can simply be lifted up to pulled away from the ice hopper.
12. Assemble the part in the reverse order of how it was disassembled.
13. Assemble the panels in the correct position, connect the power cord to the outlet, turn on circuit breaker, and turn on the main power switch.

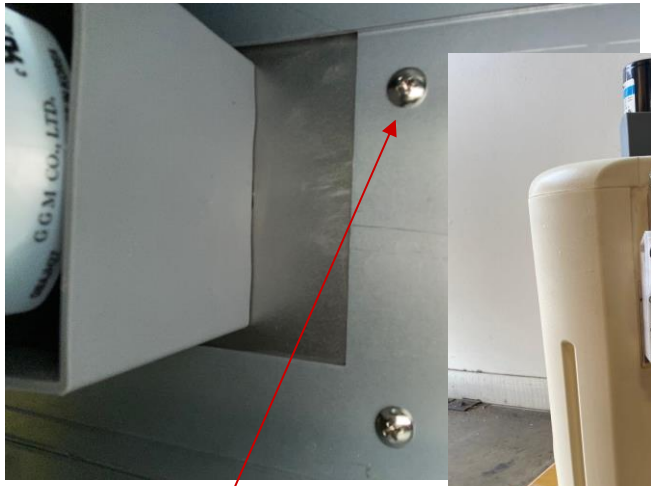

Hopper Fixing Screws
(4 total)

Hopper Removed
& Upside Down

Motor Fixing Screws
(4 total)

Agitator
Motor

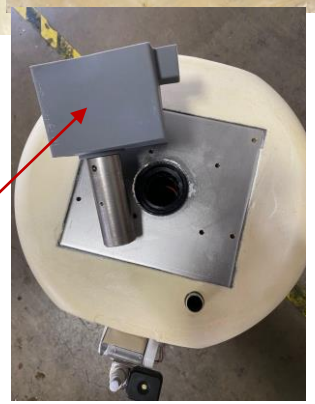

Gearbox
Removed

Disassembly ID-0450

Suggested Maintenance Schedule

Maintenance intervals will vary with ambient & water conditions.
These are only suggestions.

DAILY

Clean These Items Daily

- Ice Chute - 2 parts
- Drip Trough
- Use a mild detergent.
- Rinse & dry after cleaning.
- Wipe exterior with a clean cloth & warm water.

WEEKLY

Clean These Items Weekly

- Air filter is located underneath the dispenser and can be pulled out from the front, just under the water trough.
- Clean air filter with water.
- Dry & replace after cleaning.

Cleaning instructions can also be found here:
ID-0160 – Hopper Cover
ID-0300 – Behind Door
ID-0450 – Behind Door

Maintenance Suggestions

Suggested Maintenance Schedule

Maintenance intervals will vary with ambient & water conditions.
These are only suggestions.

EVERY 6 MONTHS

Clean These Items Every 6 Months

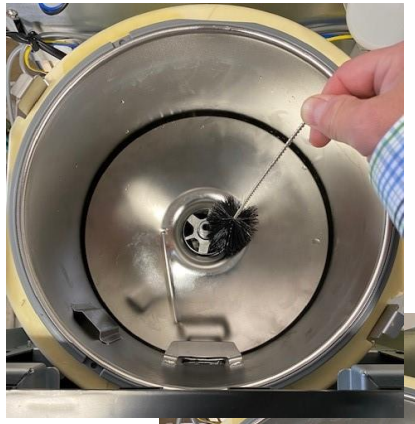

- Ice Hopper
- Evaporator, Auger, & Extruder
- Water Reservoir.
- Rinse & Dry After Cleaning.

(follow cleaning & sanitizing on 5-F)

YEARLY

Inspect These Parts Yearly

- Water Dump Solenoid
- Water Inlet Solenoid
- Water Dispense Solenoid
- Water Supply/Drain Lines
- Wear/Cracks to the Mechanical Seal
- Auger/Bearing Clearances
- Wear/Cracks to the Housing Assy & Spline Coupling
- Wear & Cracks to O-Rings

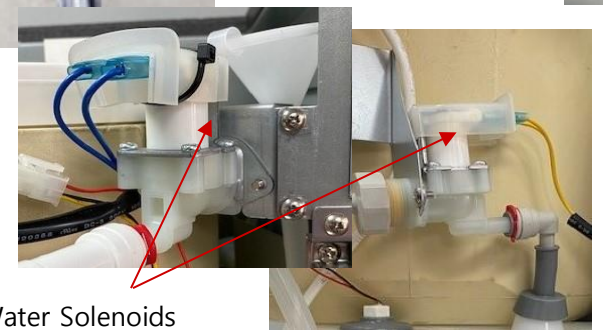

Maintenance Suggestions

Suggested Maintenance Schedule

Maintenance intervals will vary with ambient & water conditions.
These are only suggestions.

EVERY 3 YEARS

Preventative Maintenance - Technicians Only

- Inspect the inside of the evaporator cylinder for wear, cracks, etc.
- Inspect the auger for wear, cracks, etc. & replace if necessary.
- Inspect extruder for wear, cracks, etc.
- Replace the mechanical seal.
- Replace the housing o-ring.
- Inspect the coupling for wear, cracks, etc. & replace if necessary.
- Lift coupling from gearbox and inspect for wear, cracks, etc.

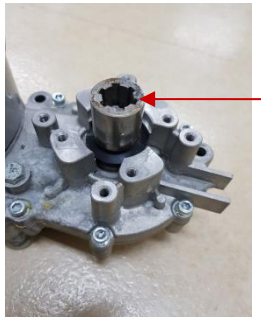

Preparation for Washing and Disinfection - Power switch set to 'ON' and operation switch set to 'OFF'

Dispense Ice

- Press the ICE & WATER buttons simultaneously for 3 seconds until both light up.
- Place a cup/bucket under ice chute and press dispensing lever to discharge ice until hopper is empty.

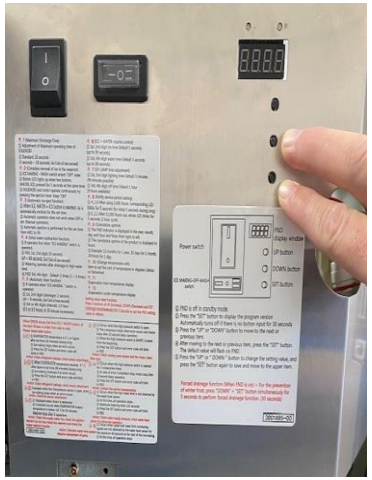

- Press the DOWN & SET buttons simultaneously for 3 seconds. Machine will enter the FORCED DRAIN feature for 30 seconds.

In a large pitcher, mix 8oz of nickel safe, ice machine cleaner or sanitizer for every gallon of water.
PLEASE OBSERVE THE CLEANING SOLUTION MIXING RATIO. FAILURE TO DO SO MAY RESULT IN CHEMICAL DAMAGE TO THE MACHINE.

Note:

Ice machine cleaners are used to remove mineral deposits such as lime marks. It cannot be used to remove scale or sticky mucus. It is recommended to proceed with cleaning first and then to sanitize. Do not mix chemicals together, doing so is **VERY** dangerous!

Inside Product Cleaning - (after removal of top panel & power off)

Remove Cover

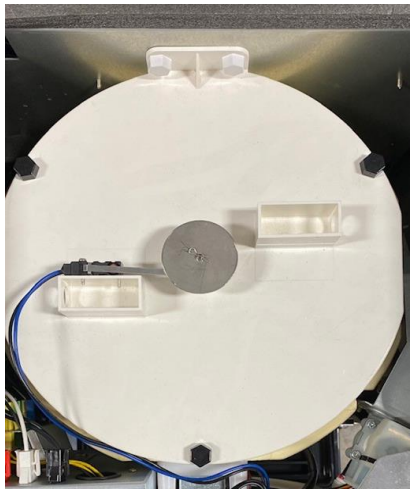

Remove Agitator

Remove Ice Base Plate

Clean Inside of Hopper

Clean Extruder Area

Rinse With Water

Replace Parts & Cover

Clean Air Filter

Cleaning Procedure

Steps to use the WASH cycle:

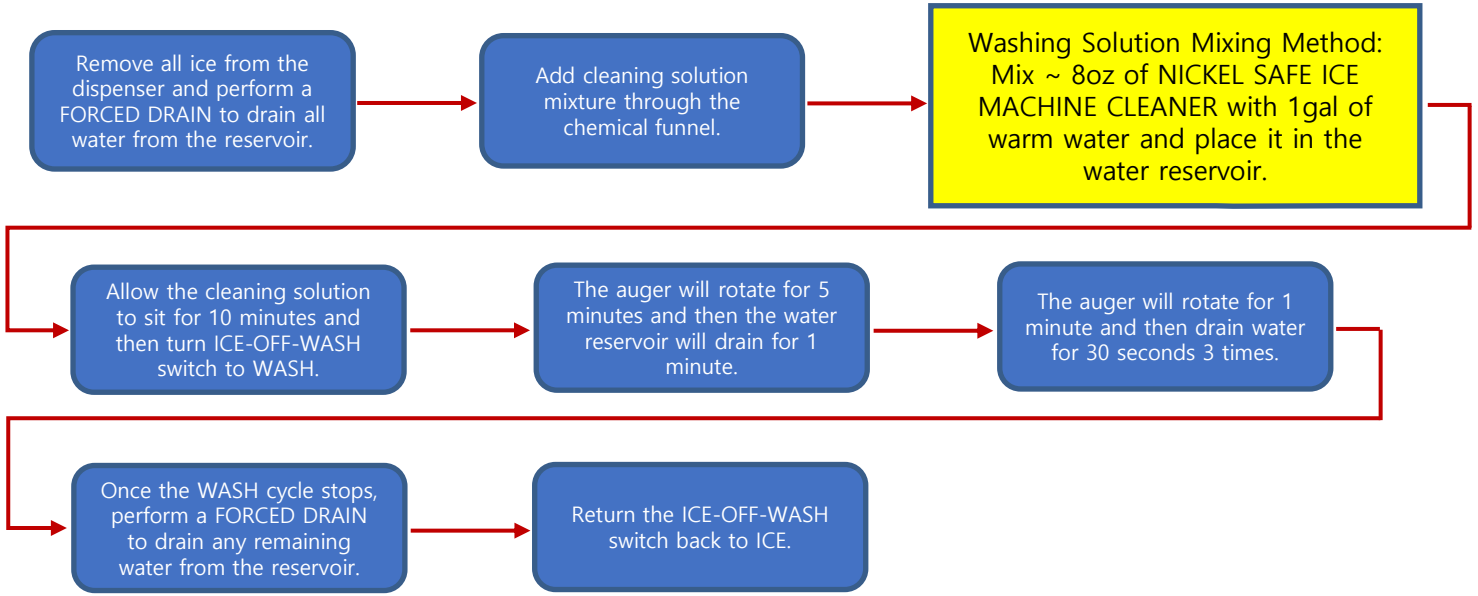

<! Caution !>

- Do not use ammonia-based products as they may cause damage to the personnel or ice machine itself.
- Cleaning and sanitizing must be conducted in accordance with the instructions in the user manual.
- Always wear protective gloves and goggles to prevent skin or eyes from coming into contact with the cleaning solution.
- Do not use ice made with the cleaning or sanitizing solution. Make sure that no cleaning solution is left on any part of the ice maker and the ice hopper.

Service Bulletin

#SB10122JM

ID-0450-AN PCB Failure

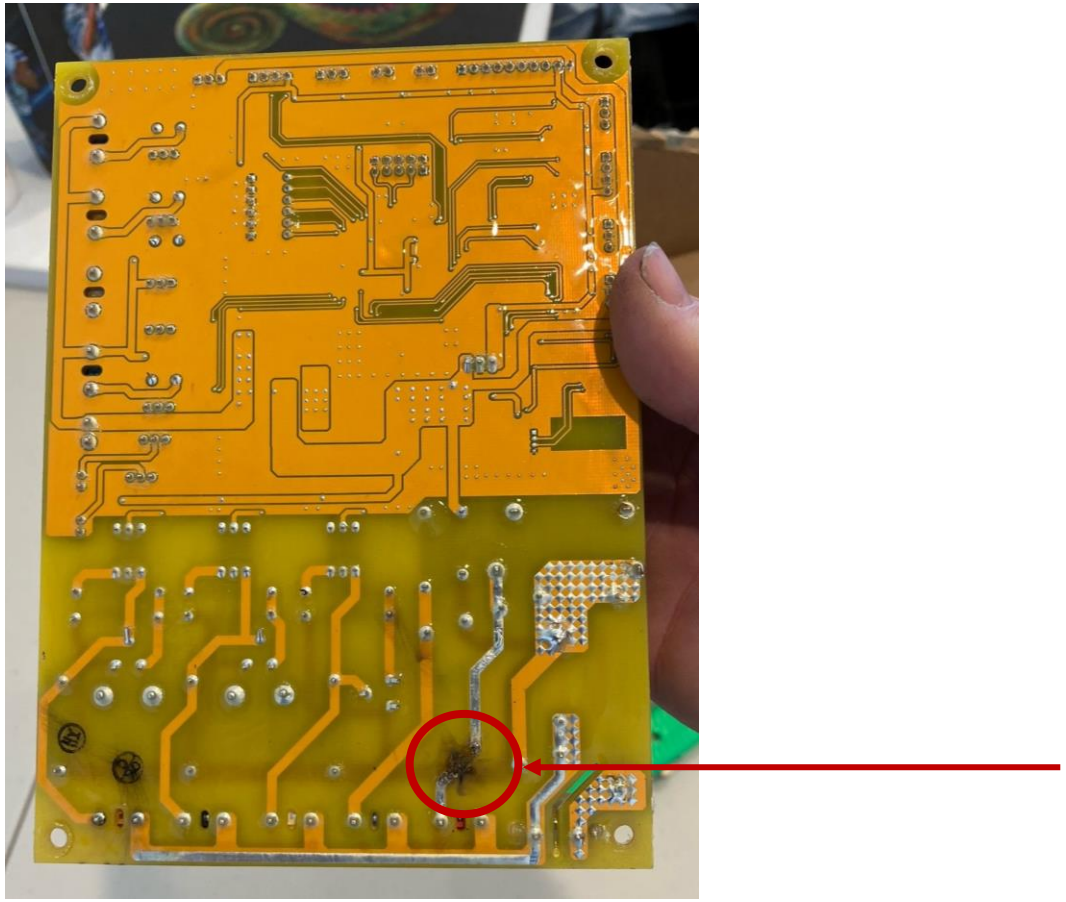

The symptoms of this type of failure that the PCB will have a burn mark on the back side, where the compressor plugs in at the corresponding front side. The customer complaint will be that the machine is not making ice And is displaying either Error Code 1 or 3 indicating a higher-than-normal evaporator temperature.

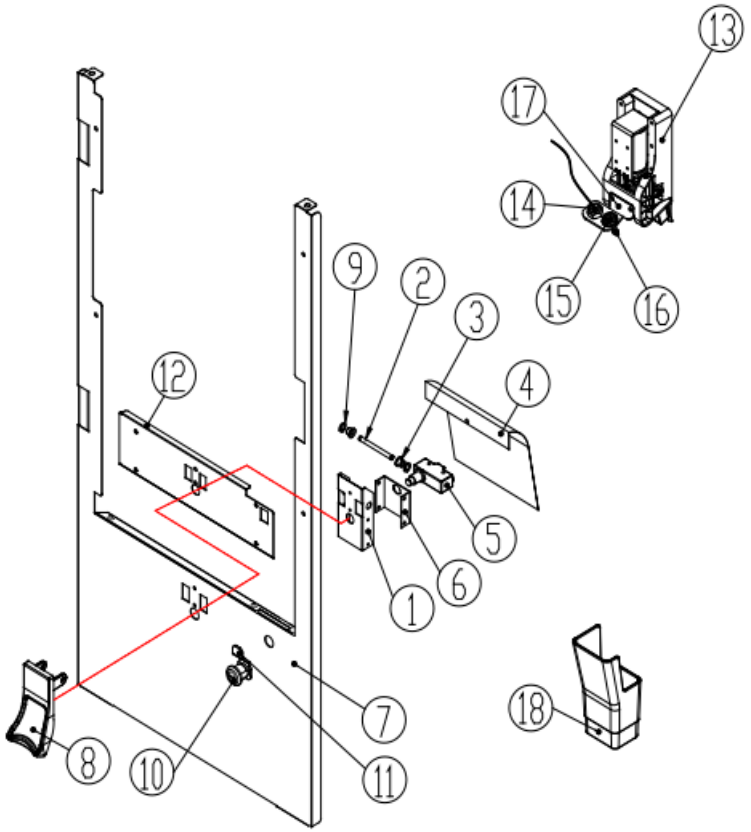

NO	ITEMS	CODE	Q'ty
1	BRACKET BASE SHUTTER LEVER	301178400	1
2	SHAFT SHUTTER LEVER	314043500	1
3	POM BEARING	310006400	2
4	FILM MICRO SWITCH	120001500	1
5	MICRO SWITCH	355024200	1
6	BRACKET MICRO SWITCH	301178500	1
7	FRONT PANEL DOWN	317218700	1
8	SHUTTER LEVER	309005801	1
9	E-RING	213001300	2
10	LOCKER	219003800	1
11	LOCKER SUUPORT	301178201	1
12	FRONT PANEL DOWN SUPPORT	317212250	1
13	ASSY SHUTTER	427060000	1
14	UV WATER PROOF MODULE	500001900	1
15	BULKHEAD CONNECTOR	398017900	1
16	WATER NOZZLE	233000400	1
17	UV BRACKET	301199750	1
18	SPOUT	318038700	1

Parts Breakdown
ID-0450

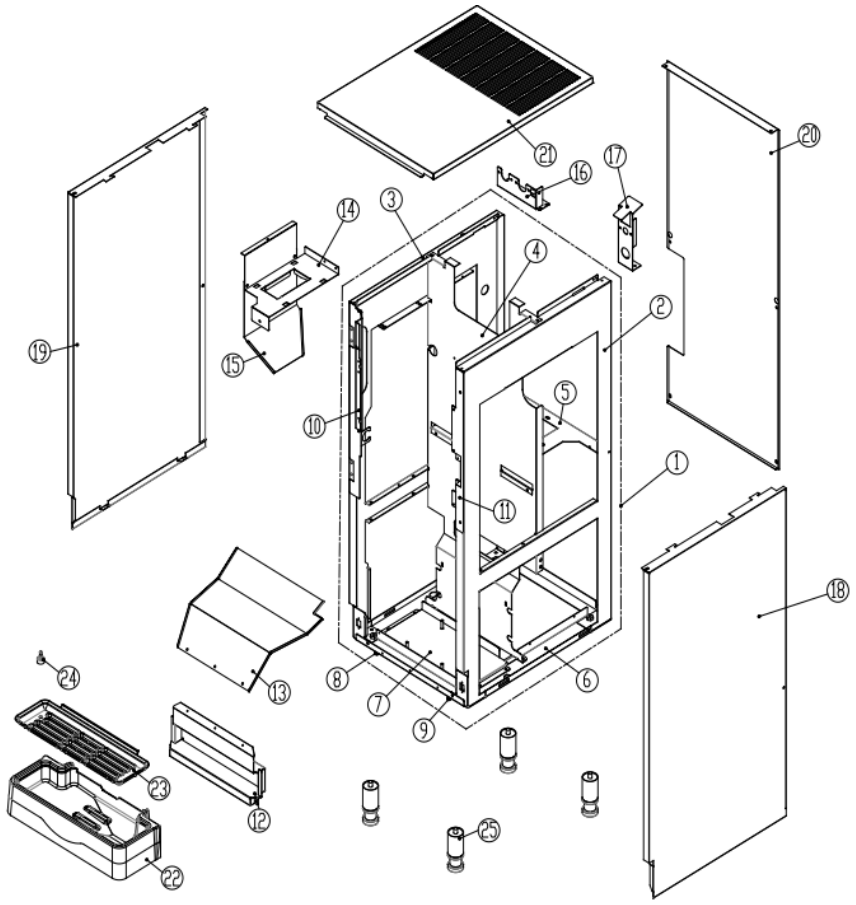

NO	ITEMS	CODE	Q'ty
1	ASSY ANGLE	444016410	1
2	RIGHT SIDE ANGLE	332047110	1
3	LEFT SIDE ANGLE	332047010	1
4	MIDDLE SIDE ANGLE	332046900	1
5	BRACKET AUGER MOTOR	301202900	1
6	BASE PLATE	332047200	1
7	COMPRESSOR BRACKET	332046810	1
8	GUIDE AIR FILTER L	332047400	1
9	GUIDE AIR FILTER R	332047300	1
10	FRONT PANEL SPASE L	301203300	1
11	FRONT PANEL SPASE R	301203200	1
12	BRACKET TOP DRAIN	301202200	1
13	PLATE DRAIN GUIDE	317219100	1
14	BRACKET WATER TANK	301202800	1
15	DRAIN GUIDE PLATE	301203500	1
16	DRAIN VALVE BRACKET	301202100	1
17	BRACKET DRAIN WATER	301202000	1
18	PANEL SIDE R	317219401	1
19	PANEL SIDE L	317219301	1
20	PANEL BACK	317219201	1
21	TOP COVER	317217900	1
22	DRAIN BOX	336029601	1
23	SPLASH GUARD	336029702	1
24	DRAIN FLOAT	336030100	1

Parts Breakdown
ID-0450

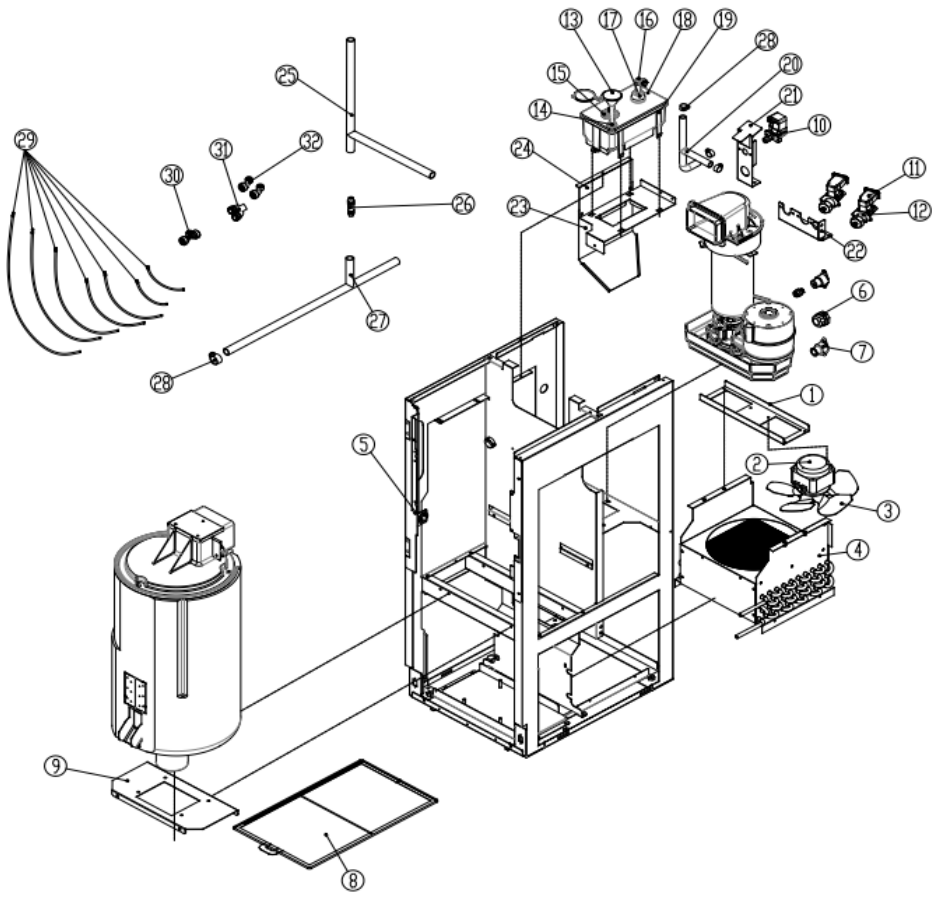

NO	ITEMS	CODE	Q'ty
1	BRACKET FAN MOTOR	301205600	1
2	FAN MOTOR/EURO/82UL-4027	353035800	1
3	FAN	308004700	1
4	CONDENSOR ASSY (115V/60Hz)	411035310	1
5	GROMMET BUSHING	232003500	2
6	CABLE GLAND	227001200	1
7	SOCKET PT3/4"	215019000	1
8	AIR FILTER	640009000	1
9	HOPPER SUPPORT BASE	301202500	1
10	WATER VALVE	340029500	1
11	WATER VALVE CAP	319007900	2
12	WATER VALVE	340029400	2
13	FUNNEL	318039300	1
14	FUNNEL PACKING	303037200	1
15	ASSY WATER LEVEL SENSOR	722014500	1
16	STEM ELBOW	398015000	1
17	RESERVOIR INLET	319007801	1
18	WATER RESERVOIR COVER	654000400	1
19	WATER RESERVOIR	654000200	1
20	MULTIPLE WATER HOSE	229033602	1
21	BRACKET DRAIN WATER SOL	301202000	1
22	DRAIN V/V BRACKET	301202100	1
23	DRAIN GUIDE PLATE	301203500	1
24	BRACKET WATER TANK	301202800	1
25	HOSE DRAIN B	229035300	1
26	NIPPLE	398011401	1
27	HOSE DRAIN A	229035200	1
28	BAND SPRING 17	203003200	7
29	PE TUBE(O.D 3/8")	229013600	-
30	EQUAL TEE(1/4")	398014300	1
31	TWO WAY DIVIDER(1/4")	398017000	1
32	REDUCING ELBOW	398013700	2
33	STRAIGHT ADAPTOR	398013400	2
34	SOCKET TURB (1/4"), THREAD NPTF (1/8")	215013500	1

Parts Breakdown
ID-0450

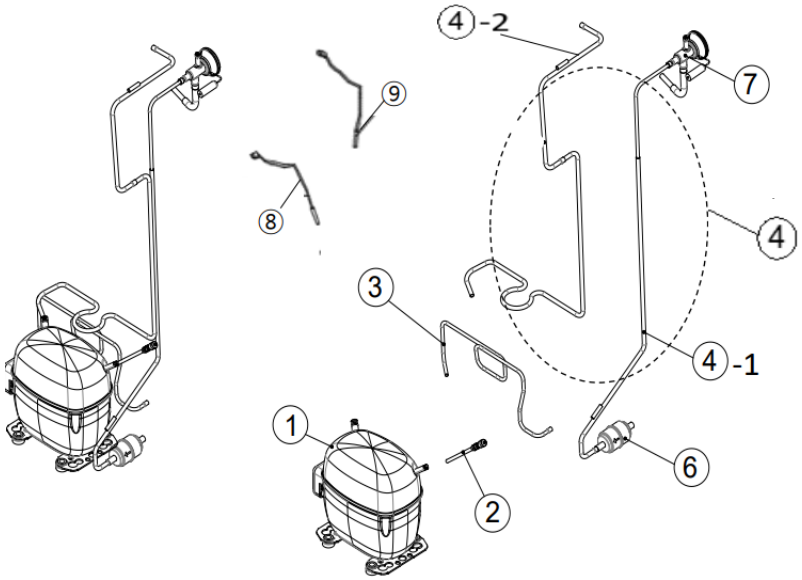

NO	ITEMS	CODE	Q'ty
1	COMPRESSOR	401023000	1
2	CHARGE ASSY	459000400	1
3	DISCHARGE PIPE ASSY	325158610	1
4	SUCTION PIPE ASSY	325158910	1
4-1	DRY-EXP PIPE	N/A	
4-2	SUCTION PIPE	N/A	
6	FILTER DRYER	372001300	1
7	EXPANSION VALVE	340004500	1
8	EVA SENSOR (YELLOW)	655008220	1
9	CONDENSER SENSOR (BLUE)	655008210	1

Parts Breakdown
ID-0450

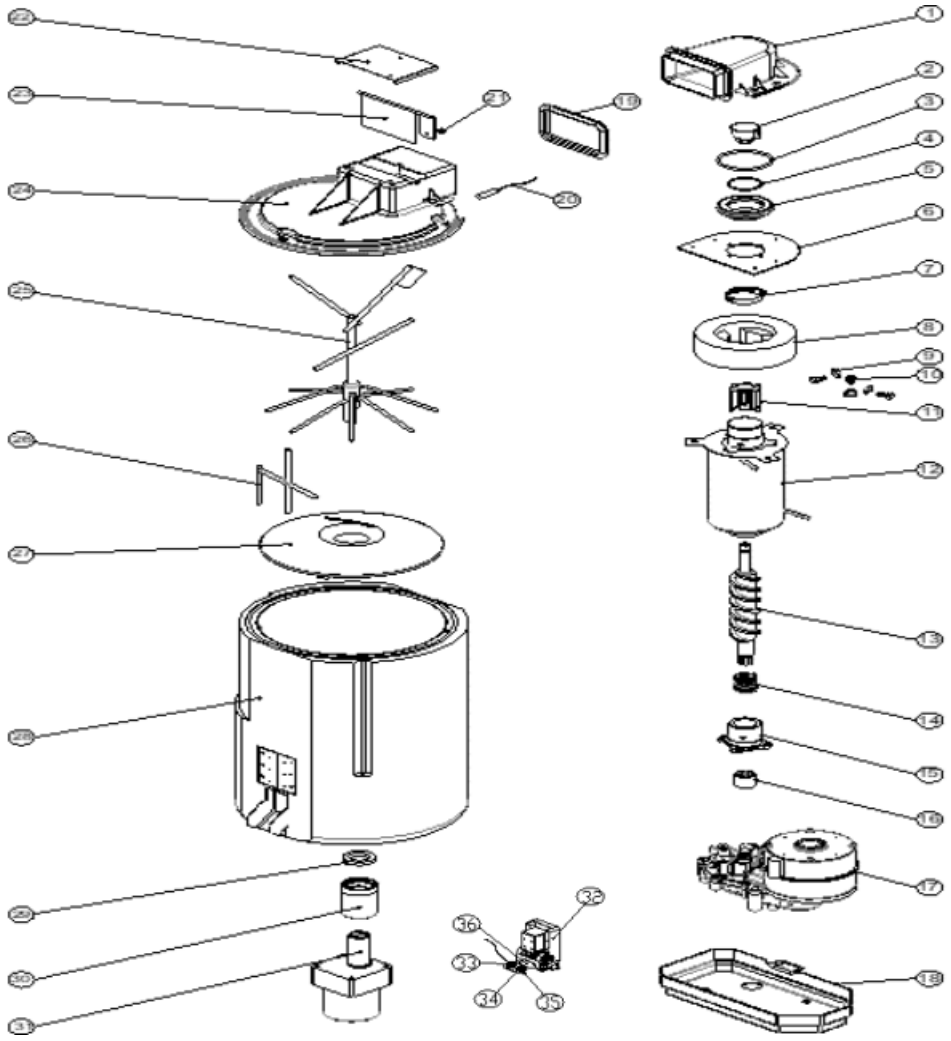

NO	ITEMS	CODE	Q'ty
1	SPOUT	450000600	1
2	IMPELLER ICE ASSY	390001500	1
3	PACKING	303040100	1
4	O-RING	303037500	1
5	HOLD SPOUT	395007800	1
6	FLANGE SPOUT	301199500	1
7	HOSE CLAMP 2"	229026710	1
8	FOAM PE EVA TOP	306045400	1
9	HEAD LOCKING WASHER	211008000	3
10	CUTTER BOLT	214030500	3
11	EXTRUDING HEAD ASSY	491000801	1
12	EVAPORATOR FORM TOTAL ASSY	409044310	1
13	AUGER	430005001	1
14	MECHANICAL SEAL	303036900	1
15	HOUSING ASSY	491000900	1
16	SPLINE COUPLING	612000800	1
17	AUGER MOTOR ASSY	406026400	1
18	GEAR MOTOR DRAIN PAN	610035700	1
19	PACKING SPOUT	303040400	1
20	MAGNET SWITCH	355014200	1
21	MOLDING MAGNET	322005600	1
22	ICE CHUTE COVER	317219000	1
23	ACTUATOR SHAFT ASSY	610035600	1
24	HOPPER COVER	318041400	1
25	AGITATOR ASSY	436003800	1
26	MIXING BAR ASSY	436004200	1
27	BASE PLATE	610035400	1
28	HOPPER FORM TOTAL ASSY	442009900	1
29	REDENAR	379003700	1
30	BEARING POM	310007300	1
31	AGITATOR MOTOR ASSY	406027610	1
32	ASSY SHUTTER	427060000	1
33	UV WATER PROOF MODULE	500001900	1
34	BULKHEAD CONNECTOR	398017900	1
35	NOZZLE WATER	233000400	1
36	BRACKET UV LED	301199712	1

Parts Breakdown
ID-0450

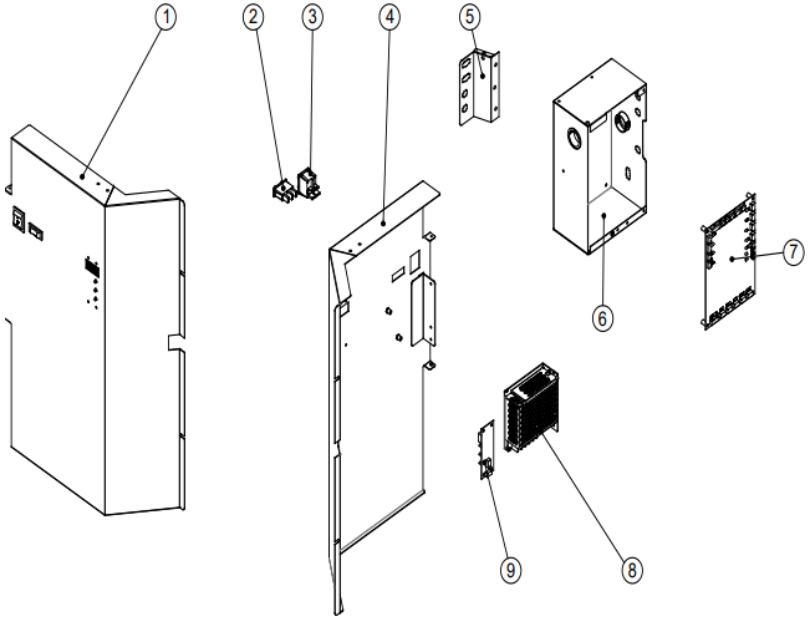

NO	ITEMS	CODE	Q'ty
1	COVER CONTROL BOX ASSY	374149500	1
2	SWITCH 3L	355009800	1
3	SWITCH	355012400	1
4	CONTROL BOX COVER	374149300	1
5	CONTROL BOX BRACKET	301184900	1
6	CONTROL BOX	374149400	1
7	MAIN PCB	367015100	1
8	SMPS	629001300	1
9	FND PCB	367013700	1

Parts Breakdown
ID-0450

Thank You

ICETRO

America